ALKIN COMPRESSORS

W31
SERIES

BREATHING AIR COMPRESSOR

2

©ALKIN Kompresör Sanayi ve Ticaret Limited Şirketi

Instructions Manual and Parts List

ALKIN KOMPRESÖR

High Pressure Breathing Air Compressor

© This manual or any parts thereof cannot be copied by any means, or used for any other purposes other than servicing ALKIN W31 Series compressors, unless specific written permission of ALKIN® is received.

© ALKIN KOMPRESÖR San. ve Tic. Ltd. Şti
İbrahim Turan Caddesi No: 127, Menderes
35470 İzmir
TURKEY
Tel: +90 232 78 222 90 • Fax: +90 232 78 222 89
www.alkin.com.tr

6

©ALKIN Kompresör Sanayi ve Ticaret Limited Şirketi

Contents

1.0 GENERAL INFORMATION 11
1.1 General 11
1.1.1 General Safety 11
1.1.2 Safety Tags 11
1.1.3 Pressure Release 11
1.1.4 Fire and Explosion 12
1.1.5 Moving Parts 12
1.1.6 Hot Surfaces, Sharp Edges and Corners 12
1.1.7 Toxic and Irritating Substances 13
1.1.8 Electrical Shock 13
1.1.9 Lifting and Carrying 13
1.1.10 Tags 14
1.2 About Compressor 14
1.2.1 General 14
1.2.2 Technical Data 18
1.3 Process and Instrument (P & I) Diagram 19
1.4 Principles of Operation 22
1.5 Lubrication System 22
1.6 Description of Major Components 23
1.6.1 Major Components – Compressor Unit 23
1.6.2 Major Components – System 24
1.7 Description of Controls 26
1.7.1 Manual Start 26
1.7.2 Auto Stop 26
1.7.3 Auto Drain 26
1.8 Installation 26
1.8.1 Inspection 26
1.8.2 Location 27
1.8.3 Piping 27
1.9.4 Electrical Controls 27
1.9.5 Wiring 28
1.10 Storage 28
1.11 Operation 29
1.11.1 Initial Start-Up Procedure 29
1.11.2 Oil Recommendation 30
1.11.3 Extremely Cold Ambient Temperatures 30
1.11.4 Motor Lubrication 30
1.11.5 Adjustments 30
1.11.6 Cylinder Filling Instructions 31
2.0 MAINTENANCE 33
2.1 General 33
2.2 Maintenance Procedure 33
2.3 Maintenance Table 35
2.3.1 Maintenance – Check Table 35
2.3.2 Replacement Table 36
2.4 Torque Values 37
2.5 Maintenance Instructions 37
2.5.1 Oil Level Check 37
2.5.2 Leak Check 37
2.5.3 Auto Drain Valves Check 38
2.5.4 Intake Filter Check 38
2.5.5 V-belt Alignment Check 38
2.5.6 Components Check 38
2.5.7 Serpentines, Intercoolers and Aftercooler, Flywheel Cleaning 39
2.5.8 Current Check 39

©ALKIN Kompresör Sanayi ve Ticaret Limited Şirketi

2.5.9 Safety Valve Check 39
2.5.9.1 Safety Valve Replace 39
2.5.10 Check Valve Check 40
2.5.10.1 Check Valve Replacement 40
2.5.11 Priority Valve Check 40
2.5.11.1 Priority Valve Replacement 40
2.5.12 V-Belt Replacement 41
2.5.13 Purifier Cartridge Refill Kit Replacement 41
2.5.14 Intake Filter Replacement 42
2.5.15 Auto Drain Valve Adjustment with Repair Kit 42
2.5.16 Oil Change Instructions 43
2.5.17 Valve Replace Instructions 43
2.6 Abrasion Limits 44
3.0 TROUBLESHOOTING 45
4.0 PARTS LIST 49
4.1 Crankcase ass'y 51
4.2 First Stage 52
4.3 Second stage 53
4.4 Third stage 54
4.5 General piping (standart) 55
4.6 General piping (Optional-Auto drain) 56
4.7 Aftercooler 57
4.8 Condensate Separator&Purifier 58
4.9 General connectors (electric motor) 59
4.10 General connectors (Petrol engine) 60
4.11 Filling line (Standart) 61
4.12 Filling line(Optional-Dual output) 62
4.13 Filling line (Optional-Dual pressure) 63
5.0 TECNİCAL DRAWİNGS 65

©ALKIN Kompresör Sanayi ve Ticaret Limited Şirketi

FOREWORD

Your new ALKIN air compressor will provide you with the solid and reliable performance that you should expect from a heavy-duty industrial air compressor.

Please read this manual carefully before you operate your compressor. This will enable you to start-up your compressor in the proper manner, as well as maintain it using the simple instructions in the maintenance section of this manual. This way your air compressor will always be in top operating condition, giving you years long trouble free service.

ALKIN air compressors are well known for their faultless design and unique features combined with the best materials and workmanship. Some of the most important features are centrifugal unloading regulators, overhung crankshaft design, solid end connecting rods, high efficiency valves, which all add to the superior and lasting performance of the ALKIN compressors.

Your compressor is backed up with worldwide sales and service organization, ready to accommodate your everyday needs for parts & service.

Service and parts supply anywhere in the world can be done by an ALKIN Dealer. For any questions, please feel free to call our Menderes plant, in İzmir-Turkey. Here are the contact details:

Address: **ALKIN Kompresör San. ve Tic. Ltd.Sti**
Ibrahim Turan Cd. N.127, Menderes
35470 Izmir, TURKEY
Telephone: **+90 – 232 – 78 222 90 (10 Lines)**
Fax : **+90 – 232 – 78 222 89**
E-mail: **alkin@alkin-compressors.com**

In all correspondences, please provide serial number and a copy of invoice.

Additionally, replacement parts not manufactured or approved by ALKIN can damage your compressor, creating risks of accidents and injuries.

ALKIN has the right to change information without any prior notice.

Users are expected to safely operate and maintain the compressor, observe the rules and instructions, as well as the local safety codes, to minimize the risk of accidents and injuries.

©ALKIN Kompresör Sanayi ve Ticaret Limited Şirketi

©ALKIN Kompresör Sanayi ve Ticaret Limited Şirketi

Section 1

1.0 GENERAL INFORMATION

1.1 General

1.1.1 General Safety

All ALKIN air compressors are designed and manufactured with equipment and components that allow safe operation of the compressors. However, it is the user's responsibility to safely operate and maintain the compressor, observe the rules and instructions, as well as the local safety codes, to minimize the risk of accidents and injuries. The following safety precautions are offered only as a guideline, and it is recommended to follow them along with the local safety codes and regulations.

This compressor should only be operated by those who have been trained to do so, and who have read and understood the contents of this manual. Failure to do so will increase the risks of accidents and bodily injuries. Please read also the manual of the equipment (electric, etc.) delivered together with the compressor and perform the instructions.

Never start this compressor unless it is safe to do so. Do not operate it with known unsafe condition. Tag the compressor and render it inoperative by disconnecting the power supply, so that others who may not know of the unsafe condition will not attempt to operate it until the unsafe condition is corrected.

Install, use and operate this air compressor only in full compliance with all pertinent requirements and all relevant federal, state and local codes and regulations.

Do not modify this compressor and do not use beyond the specified limits (pressure, etc.) and speeds except with prior written approval of ALKIN.

1.1.2 Safety Tags

Earthing

Hot Surface-Do Not Touch

Can Start Automatically

Caution: Moving Parts

1.1.3 Pressure Release

Run the compressor to see if the safety valves are operating properly or not. See and ensure, safety valves are discharging the pressure on their adjusted pressure values. Do not open the oil filling plug or any other connection, tube, hose, fitting, valve etc. when the compressor is running or when it is standing by (in only automatic start/stop compressors waiting for the pressure switch signal to re-start). Switch off the main electrical switch, shut off the discharge valve and discharge all pressurized sections before attempting to dismantle such components.

©ALKIN Kompresör Sanayi ve Ticaret Limited Şirketi

Keep all persons away from the discharge opening of hoses, tools and accessories during discharge. Do not use air pressure above 7 Bars (101 Psi) for blow cleaning purposes, without use of proper protective equipment. Do not let the hoses move free or don't play games with the filling hoses as they may cause accidents and injuries.

Drain daily the condensate from the purifier, as it may accelerate the internal rusting and corrosion of the purifier.

1.1.4 Fire and Explosion

Clean up oil spills immediately, if and when it occurs. Shut off the air compressor and allow it to cool. Keep sparks, flame and other sources of ignition away and do not allow smoking in the vicinity when checking and draining or adding oil. Do not permit liquids such as airline anti-icer system anti-freeze compound, or oil film or any other combustible substance to accumulate on any external or internal surfaces of the compressor. Wipe down with aqueous industrial cleaner or steam to clean as required. Do not use flammable solvents for cleaning purposes.

Disconnect the power supply prior to attempting any repair or cleaning. Tag the power supply to avoid unexpected start by someone else.

Keep electrical wiring, including terminals, in good condition. Replace any wiring that has cracked, cut, abraded or otherwise degraded insulation or terminals that are worn, discolored and corroded. Keep all terminals clean and tight.

Keep grounded conductive objects such as tools, away from exposed live electrical parts such as terminals, to avoid arcing which might serve as a source of ignition.

Keep a suitable BC or ABC fire extinguisher(s) nearby while servicing and operating the compressor. Keep oil rags, trash, leaves litter and other combustibles away from the compressor.

Do not spray volatile materials into the compressor intake, as serious damage to the compressor and personal injury or death may result.

1.1.5 Moving Parts

Keep hands, arms and other parts of the body and clothing away from the belts, pulleys and other moving parts. Do not attempt to operate the compressor with the canopy cover removed at flywheel side.

Wear snug fitting clothing and confine long hair when working around the compressor, especially when exposed to hot and/or moving parts. Make sure all persons are clear of the compressor prior to attempting to operate it.

Make adjustments only when the compressor is shut off. When necessary, make adjustments, then start the compressor to check if the adjustment is correct or not. If incorrect, shut the compressor, blow down the air, re-adjust, than re-start to check the adjustment.

Keep hands, feet, floors, controls and walking surfaces clean and free from oil, water, anti-freeze or other liquids to minimize the possibility of slips, falls and shock hazard.

1.1.6 Hot Surfaces, Sharp Edges and Corners

Avoid physical contact with hot oil, hot surfaces, sharp edges and corners. Keep all parts of the body away from all points of air discharge and away from hot cylinder heads, discharge pipes and intercooler surface. Wear personal protective equipment, including gloves and protective hat when working on or around the compressor.

Keep a first aid kit handy. Call for medical assistance promptly in case of injury. Don't ignore small cuts and burns as they may lead to infections.

©ALKIN Kompresör Sanayi ve Ticaret Limited Şirketi

1.1.7 Toxic and Irritating Substances

Do not use air from this compressor for breathing unless it is equipped with proper purification equipment.

Make sure that Purifier Cartridge is installed inside the Purifier Housing.

Operate the compressor only in well ventilated areas. Lubricants used in this compressor are typical synthetic oil. Accidental ingestion and skin contact should be avoided. Wash with soap and water after skin contact. If swallowed, call for medical treatment promptly.

1.1.8 Electrical Shock

Keep the compressor, hoses, tools and personnel at least 3 meters (10 ft.) away from power lines, panel and underground cables.

Keep all parts of the body and any hand held tools or other conductive objects away from exposed live parts of the electrical system. Maintain dry footing, stand on insulating surfaces, and do not contact any other portion of the compressor when making adjustments or repairs to exposed parts of the electrical system.

1.1.9 Lifting and Carrying

If you must lift the compressor, lift in full compliance with codes and regulations. Make sure entire lifting, rigging and supporting structure has been inspected, is in good condition and has a rated capacity of at least the net weight of the compressor. If you are unsure of the weight, check before lifting.

The distance between forklift's forks should be sufficient for lifting if the compressor will be carried and lifted with the forklift. Moreover, the forklift must have a rated capacity of at least the net weight of the compressor. The forks of the F/L should be positioned under the compressor just like shown in the figure below. The height of the compressor from the ground must be max. 10 cm. during carriage.

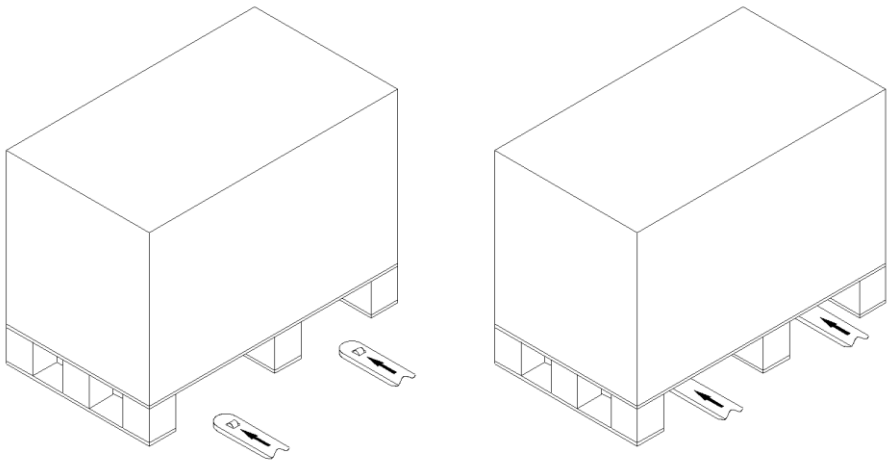

Do not distract the forklift operator while carriage.

Verify the lifting hook has a safety clamp, and ensure a robust fastening with tough ropes or chain. Avoid the compressor swinging while suspended, by using guide ropes. Keep all persons clear from under and away from the compressor when it is suspended. Lift the compressor not higher than necessary. Keep lift operator in constant attendance whenever the compressor is suspended.

Set the compressor down on level surfaces, capable of carrying its full weight.

©ALKIN Kompresör Sanayi ve Ticaret Limited Şirketi

Note

Do not run the compressor on wooden pallet where the unit is mounted for transportation purposes.

1.1.10 Tags

Symbol	Explanation
	CAUTION: MOVING PARTS
	CAN START AUTOMATICALLY
	HOT SURFACES-DO NOT TOUCH
	EARTHING

1.2 About Compressor

1.2.1 General

W31 Series compressors are three stage, reciprocating type, air cooled and splash lubricated compressors. Working pressure of these compressors, depending on valves and heads, can be between 10 bar (1500 psi) and 350 bar (5000 psi). Do not attempt to modify compressor to operate at higher-pressure without written approval of ALKIN. Failure to do so may result in heavy damage to equipment, injury or death.

W31 Series compressors are built with oversized intercoolers and aftercooler to allow superior performance, longer life, and lower operating and discharge temperatures.

W31Series compressors are designed and manufactured with three stage and three cylinders. Cylinders from "W" shape. From front view, first stage is in the middle, second stage is on the right and third stage is on the left.

©ALKIN Kompresör Sanayi ve Ticaret Limited Şirketi

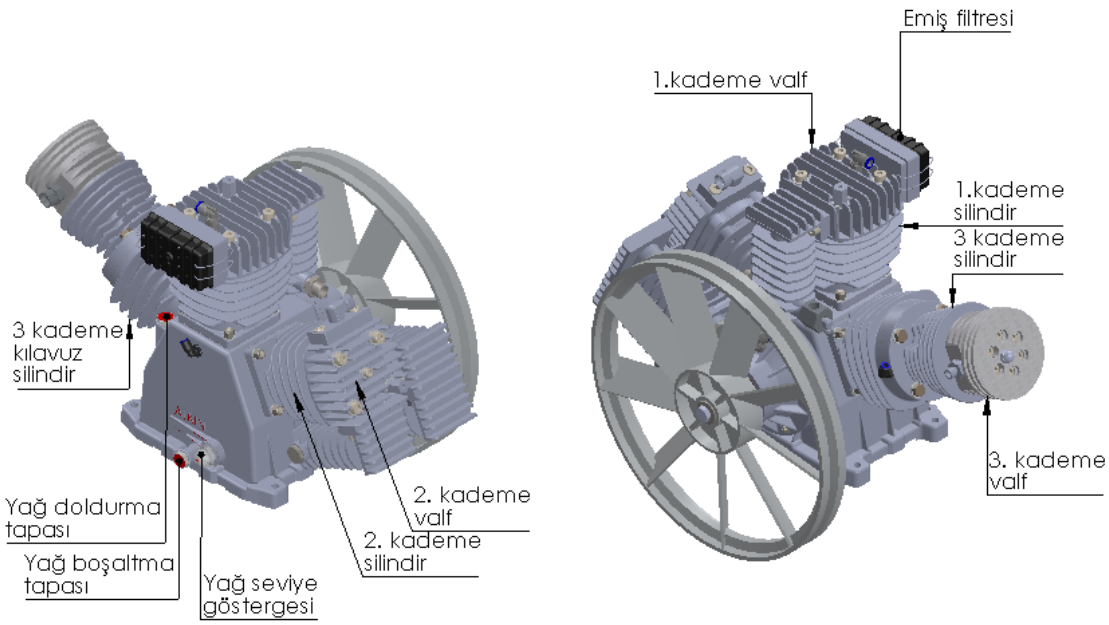

Şekil 2-Compressor Unit

W31 Series compressors are design and manufactured with intercooler serpentine located between 1st-2nd Stage cylinders, and aftercooler located at the 3rd Stage outlet. There are water separators at the outlet of 2nd Stage intercooler and at outlet of 3rd Stage aftercooler. Water Separators are connected to auto drain valves that periodically drains the condensate water. The duration and frequency of opening of these drain valves are determined by the time relay located in the electric panel. (Please see Check section.) This time relay can be set for both functions.

There is a Safety Valve at each stage to prevent an unwanted increase in pressure resulted from a problem in valves or any other parts. It must be periodically checked that, these safety valves are working properly and they keep their set pressure values. (Please see Maintenance Table.)

W31 Series compressors are equipped with stainless valves at each stage that are designed to maintain the airflow without any loss of pressure. They are easy to maintain and replace. The maintenance of valves are especially important as they are the main parts in proper and problem-free working of compressors. Lubricants not approved by ALKIN can prevent valves from working properly due to the accumulation of carbon on springs and washers. Valves not working properly will cause an increase in working temperature and the deterioration of lubricant, thus in return, will further break down the valves.

Max working pressure is 350 bar and, it is dangerous and strictly prohibited to set a value higher than 350 bar. ALKIN will not be held liable for any problems resulting from acting otherwise.

Working temperature range of the compressor is **–10/+50 ºC**.

Compressor Unit involves the main groups below;

1. Compressor Unit
2. Electric Drive
3. Subbase
4. Water Separator
5. Purifier
6. Priority Valve
7. Check Valve
8. Aftercooler
9. Safety Valve
10. Intake Filter
11. Filling Hose
12. Filling Valve
13. Filling Gage
14. Yoke
15. Vibration Mount
16. Control Panel
17. Start-Stop
18. Hourmeter
19. Carrying Handle
20. 2nd Stg. Drain Valve
21. 3rd Stg. Drain Valve
22. Purifier Drain Valve

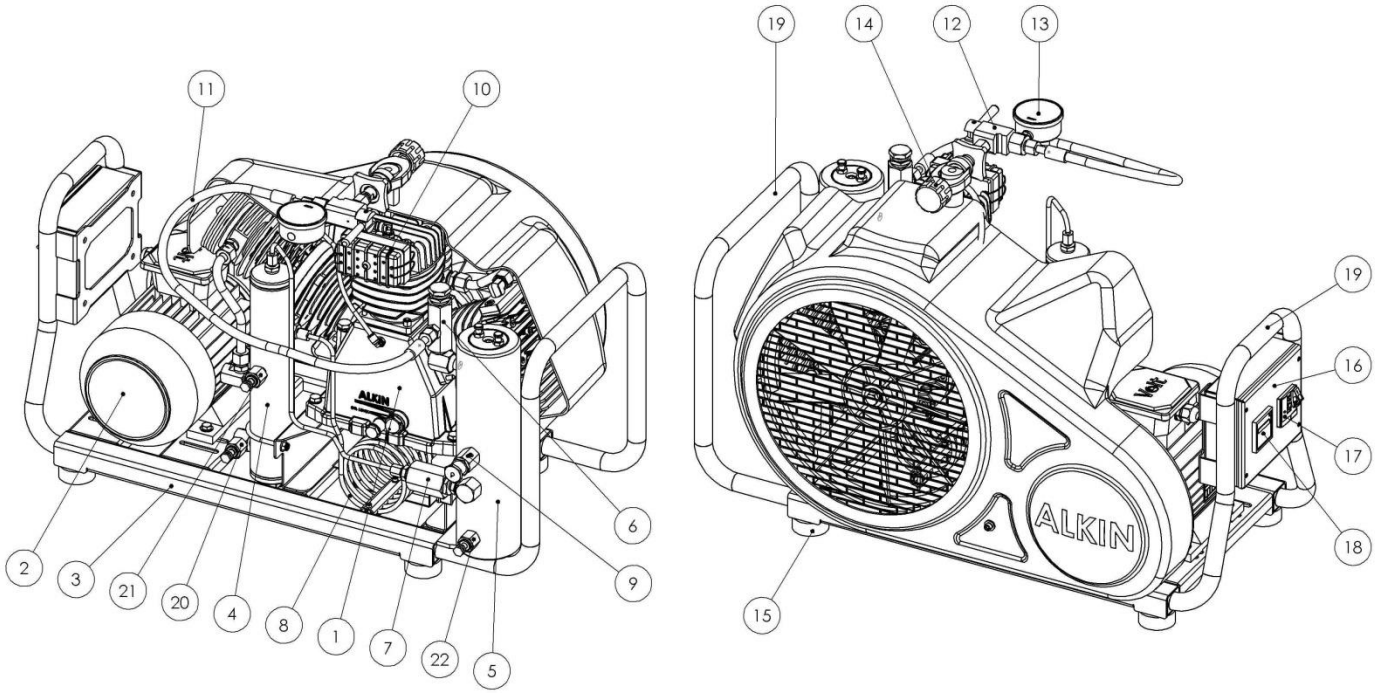

Şekil 3 - W31 general layout (Standard)

©ALKIN Kompresör Sanayi ve Ticaret Limited Şirketi

23. Pressure Switch
24. Drain Solenoid
25. Auto Drain Valve
26. Start-Stop
27. Hourmeter

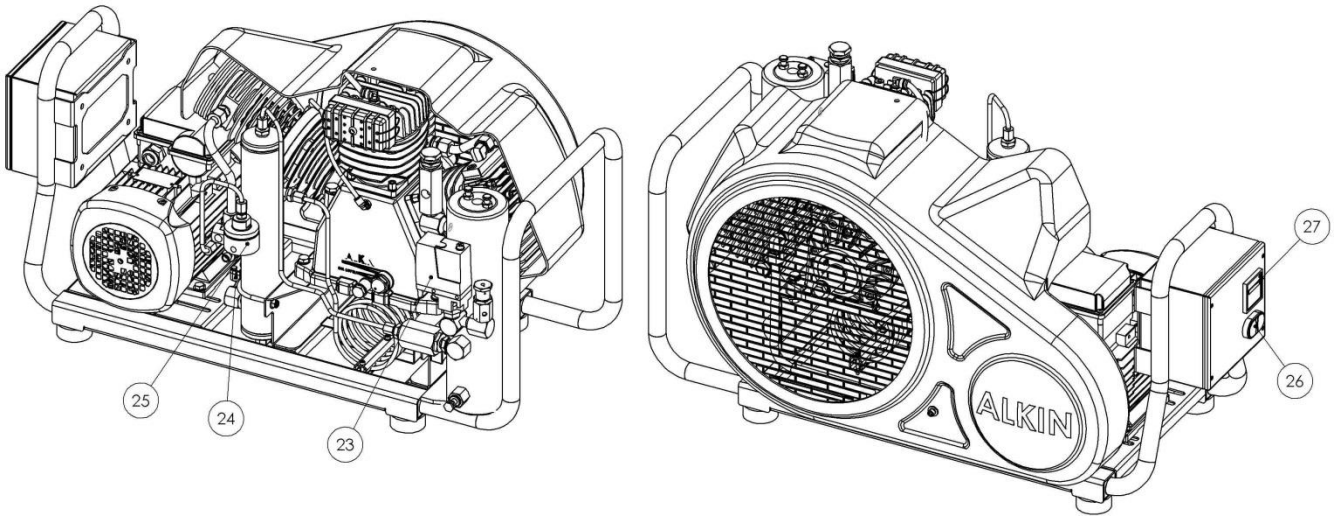

Şekil 4 - W31 general layout (Auto Drain)

28. Pressure Selecting Valve
29. 300 Bar Pressure Switch
30. 200 Bar Pressure Switch
31. 300 Bar Safety Valve
32. Pressure Gauge
33. Filling Manifold
34. 200 Bar Filling Valve
35. 300 Bar Filling Valve
36. 200 Bar Safety Valve

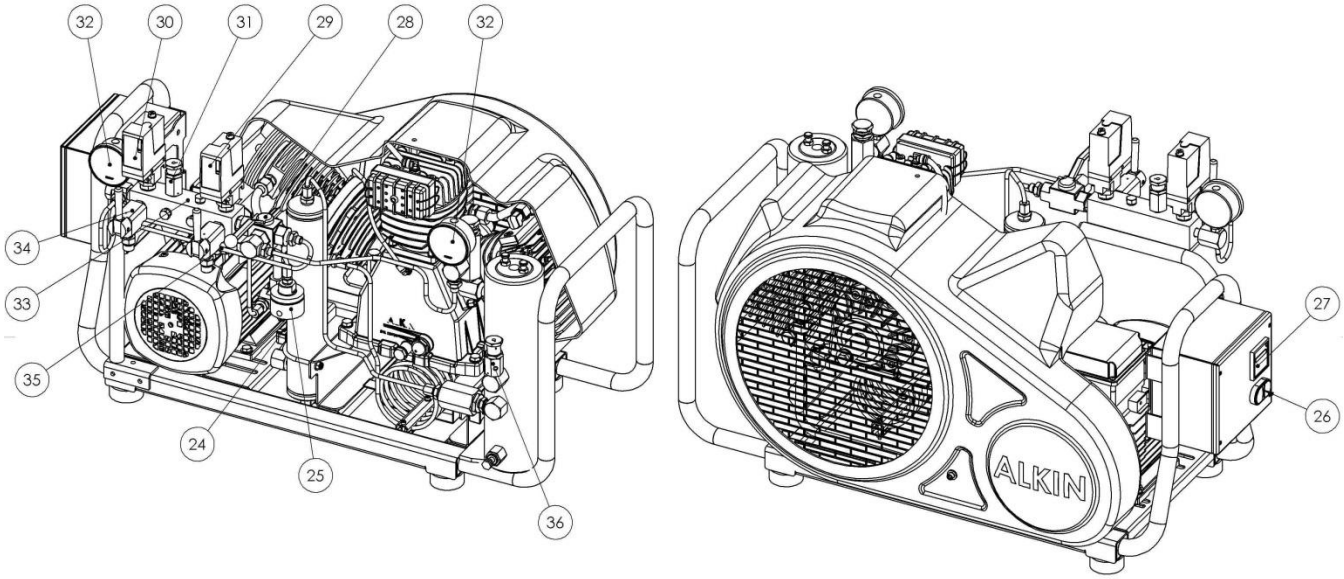

Şekil 5 - W31 general layout (Auto Drain)

Not

Auto Start / Stop can be installed on compressor(s) upon request.

©ALKIN Kompresör Sanayi ve Ticaret Limited Şirketi

1.2.2 Technical Data

The model designation for these series compressors are based on the data below

Model	Motor Power	No. of Outlets	Working Pressure	Purifier
W31 Mariner Breathing Air Compressor	2.2 kw	1	200, 300 Bar	P21

Performance Data

Model	Working Pressure		FAD		Motor Power		RPM	Cylinder Diameter	No. of Stages
	BAR	PSI	Lt/min	Cfm	HP	kW		Stroke	
W31 Mariner Breathing Air Compressor	200	2900	90/110	3,25/4	3	2.2	1060 d/d	66x38x14	3
	300	4350						40	

Stage Pressures

Outlet Pressure	1st Stg. Pressure		2nd Stg. Pressure		3rd Stg. Pressure	
	Bar		Bar		Bar	
200/300 bar	Min.2	Max.5.5	Min. 20	Max. 38	200	300

©ALKIN Kompresör Sanayi ve Ticaret Limited Şirketi

1.3 Process and Instrument (P & I) Diagram

The following process and instrument diagrams are prepared with the drawing of the physical components rather than pneumatic symbols, in order to facilitate the understanding of the system by users who are not specifically trained to understand pneumatic symbols.

This compressor is designed to operate at a "dual pressure" or a "single pressure" This is, when the compressed air is used to fill all the cylinders at that single pressure.

By looking at the P&I Diagram, you can see the general layout of the system and operational turns.

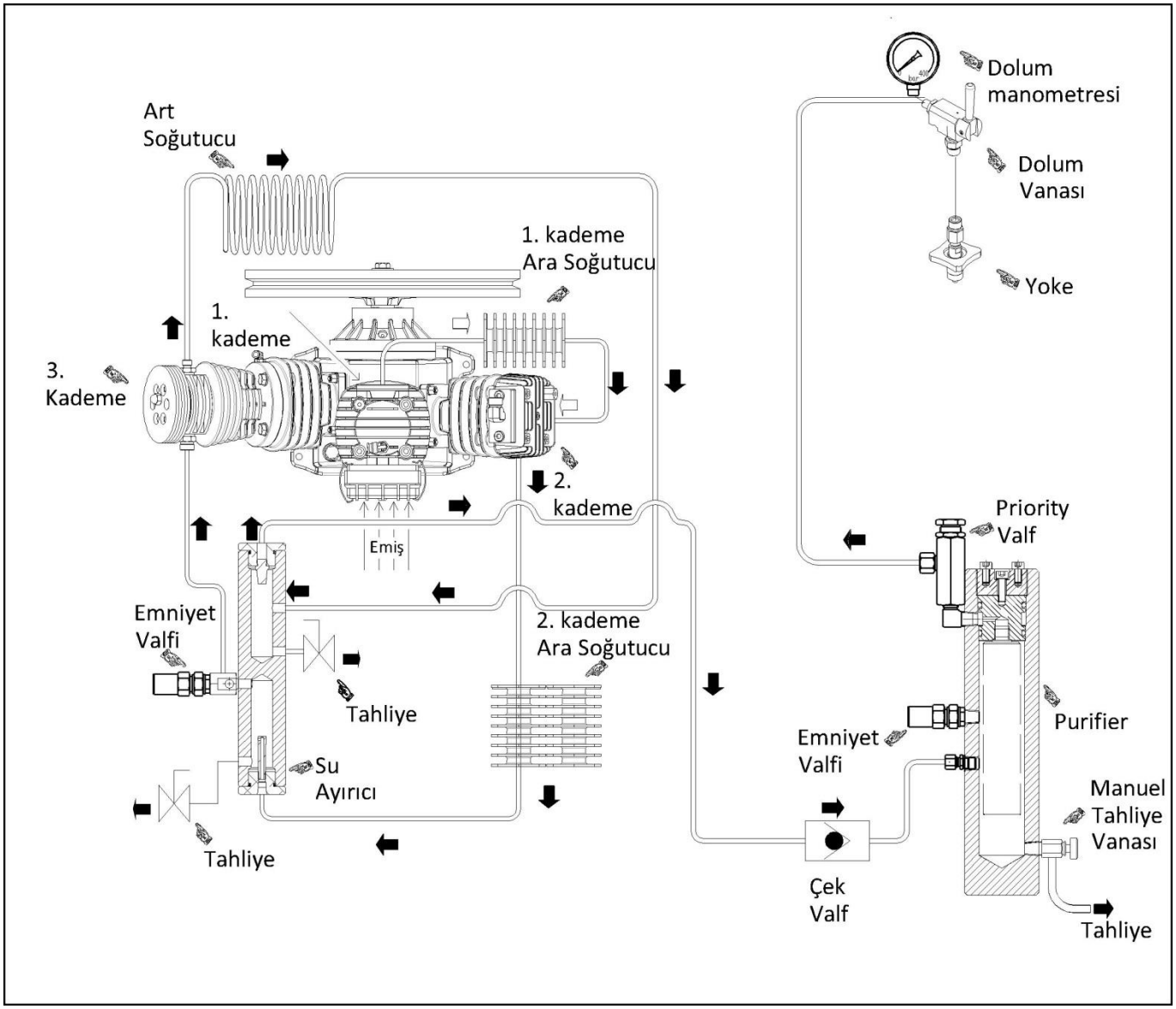

Şekil 6 - P & I Diagram (Standard)

©ALKIN Kompresör Sanayi ve Ticaret Limited Şirketi

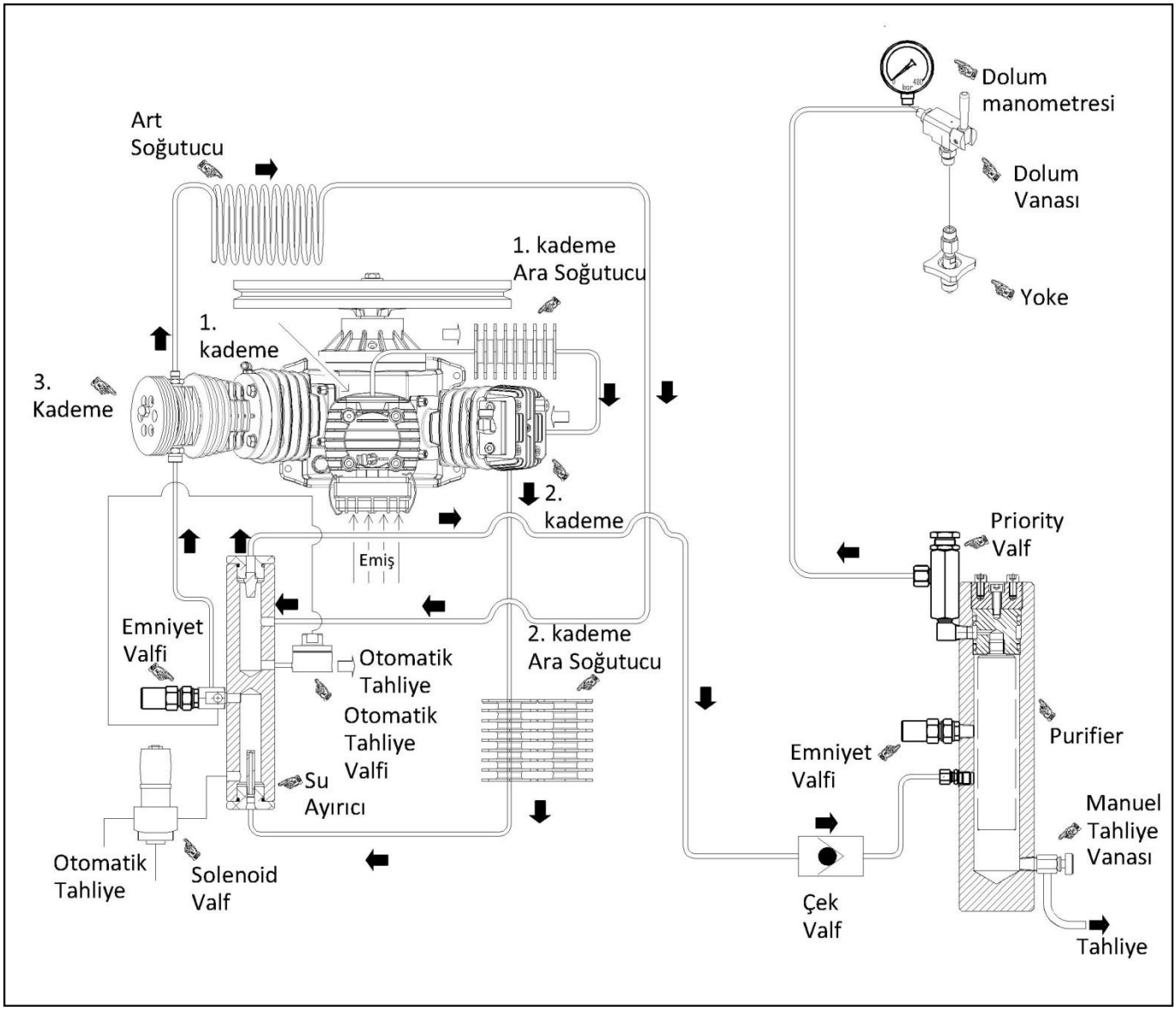

Şekil 7 - P & I Diagram (Auto Drain)

©ALKIN Kompresör Sanayi ve Ticaret Limited Şirketi

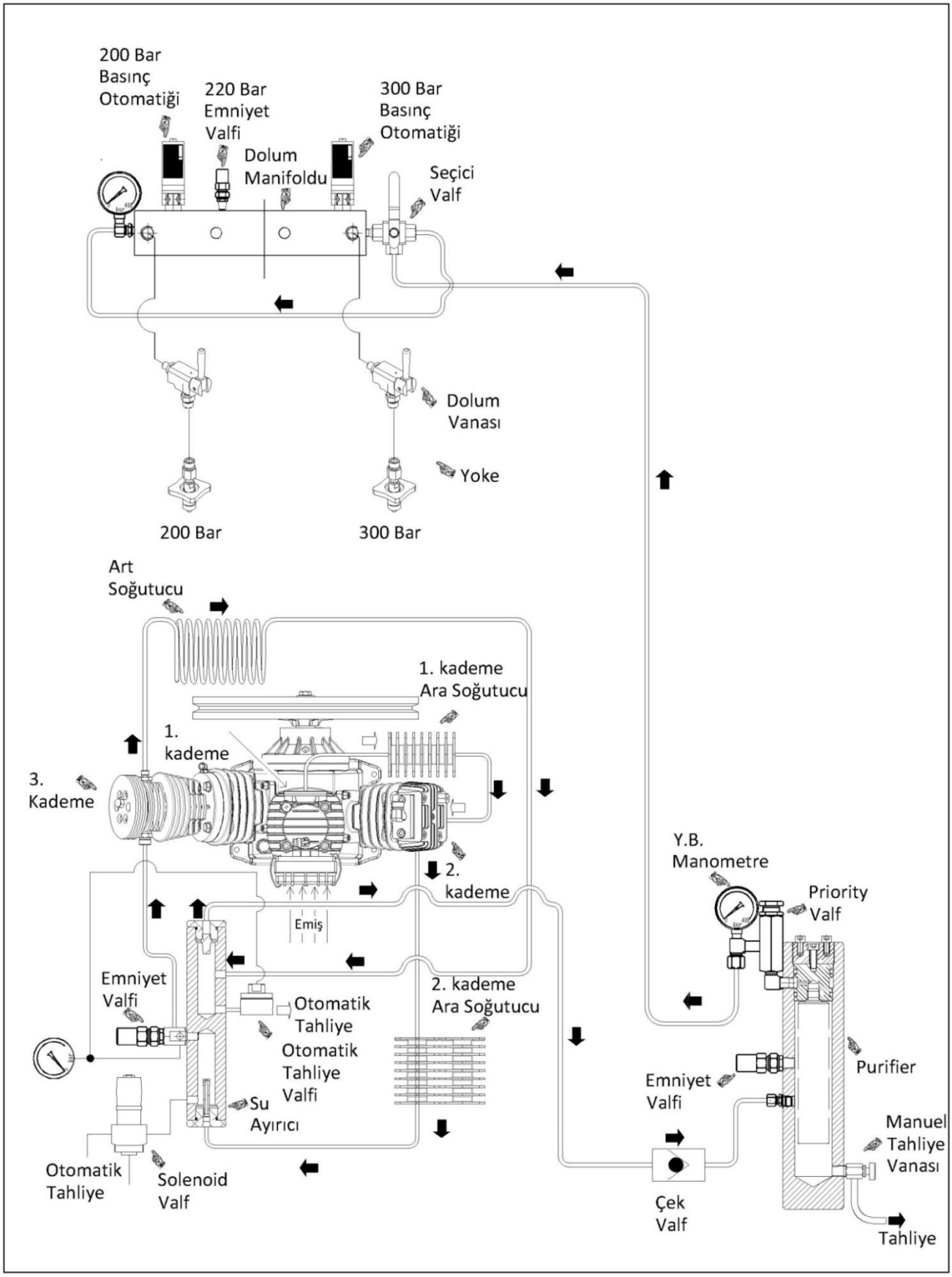

Şekil 8 - P & I Diagram (Dual Pressure)

©ALKIN Kompresör Sanayi ve Ticaret Limited Şirketi

1.4 Principles of Operation

The P & I diagram have to be reviewed carefully to understand the principle of operation.

The air is drawn at atmospheric pressure, through the inlet filter into the 1st stg. cylinder on the up-stroke of the piston. The up-stroke motion of the piston will cause compression and the air will be forced out of the cylinder through 1st stg. discharge valve. Air will then pass through the intercooler tubes between the 1st and 2nd stg. and into the 2nd stg. compression chamber. Here, the air is compressed to the 2nd stg. compression level and forced through the 2nd stg. valves + 2nd stg. intercooler + water separator + 3rd stg. inlet valve into the 3rd stg. cylinder. Here, the air is compressed to the final pressure level and forced out to the aftercooler, oil & water separator (pre-filter), than passing through a check valve enters the purifier chamber, where it is purifier and prepared to be used for breathing purposes. A priority (or minimum pressure valve) is installed downstream the purifier; this valve prevents the air to exit the purifier until the pressure builds to approximately 150 bar, a pressure level where the purification process is more efficient than at lower pressures. The air is than ready to be directed to a filling panel and with proper connections to the cylinders to be filled. The intercoolers and the aftercoolers are designed to dissipate the heat generated from the previous compression cycle, reducing the air temperatures, allowing the water vapor to condensate and settle in the bottom sections of the water separators. The water separator and the oil & water separator (prefilter) are equipped with either a manual drain or, an automatic drain valve, or both.

The drain valve is a 3 way pneumatic valve controlled by a 3-way solenoid valve. This solenoid valve sends or removes the control air from the drain valves, thus letting them to open or close. The solenoid itself is controlled by a sequential timer relay in the electrical panel. The dual time adjustment on this relay allows to adjust the duration during which the solenoid will remain energized (=the drain valve will remain closed), and the length of time during which the solenoid will become de-energized (=the drain valve will open and perform the drain function).

The condensate water should be drained by using the manual drain valve located below purifier, when the compressor is operating, at every ten minutes. This should be done even for mariner models with auto drain feature. Moreover, when the compressor is shut off, this should be done to drain the compressed air in the purifier.

Compressor can be started or stopped with the start / stop button located on the electric panel. Oil level can be monitored by Oil Level Glass located in the front side of the crankcase. Oil level should be checked daily.

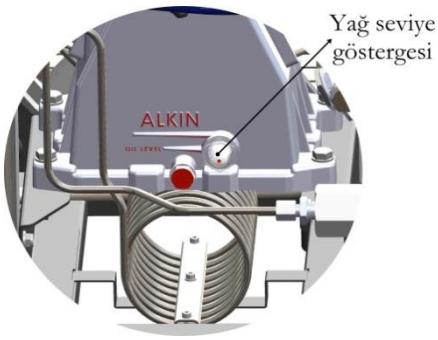

1.5 Lubrication System

Lubrication is performed with splash lubrication system. The stick at the bottom of connecting rod moves in oil and the connecting rod lubricates the stages by carrying the oil upstream with the oil received from the crankcase. Replace the compressor's oil due to maintenance table periods. This is quite important for the service life of compressor. See the oil replacement introduction for changing the oil.

©ALKIN Kompresör Sanayi ve Ticaret Limited Şirketi

1.6 Description of Major Components

1.6.1 Major Components – Compressor Unit

Crankcase:
This is the frame that holds everything on it. It contains the oil that lubricates the system. The cylinders are mounted on it. The crankshaft is inserted into the bearing housings which is an integral part of the crankcase. There is no maintenance or repair works that need to be done on this part; it needs to be cleaned inside when the oil is changed. If there is a visible damage, it should be replaced.

CONSULT THE NEAREST ALKIN DEALER OR ALKIN FOR REPLACEMENT OR MAINTENANCE.

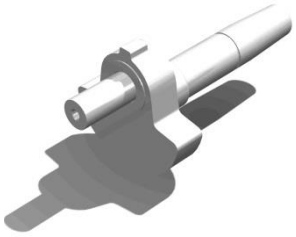

Crankshaft:
It is overhung type; that means the bearings are on one side, and the crank pin (where connecting rods are mounted) are on the other side. This unique feature allows usage of single piece connecting rods which are far more accurate and safe than split con rods. Large bearings in conjunction with low speeds, allow very long crankshaft life. Replace this part when life of bearings is over.

CONSULT THE NEAREST ALKIN DEALER OR ALKIN FOR REPLACEMENT OR MAINTENANCE.

Connecting Rods:
In W31 Series compressors, there are three connecting rods, two of which are the same and the third one is with a stick at the bottom part serves as the lubricating stick. Connecting rods move with the rotation of crankshaft and the stick at the bottom of the connecting rod lubricates the system by moving up & down in the oil. Connecting Rods have high quality copper-bronze alloy bushings. When these bushings are abraded, you should replace the connecting rods.

CONSULT THE NEAREST ALKIN DEALER OR ALKIN FOR REPLACEMENT OR MAINTENANCE.

Cylinders:
They are casted separately and are made of high grade casting materials, machined & honed to fined tolerances for long service life. The compression cylinders on the 3rd stg. is mounted on guide cylinder to guide the crosshead piston ass'y. However, have the cylinders tested with proper testing equipment in general overhaul periods and replace them if exceeding the tolerance limits mentioned in parts list or having a visible fault.

CONSULT THE NEAREST ALKIN DEALER OR ALKIN FOR REPLACEMENT OR MAINTENANCE.

Valve Complete:
The complete valve consists of valves and up & down covers inside and is located on top of the cylinders. These complete valves should be maintained periodically and replaced if required. The valves must be

©ALKIN Kompresör Sanayi ve Ticaret Limited Şirketi

replaced in every general overhaul period. Replacement of the valves can be made by ALKIN Service Personnel or a trained costumer.

CONSULT THE NEAREST ALKIN DEALER OR ALKIN FOR REPLACEMENT OR MAINTENANCE.

Breather:
All piston type machines have some compression leak through the rings into the crankcase. There is a breather system to prevent the pressure built up in the crankcase. In the air compressor the crankcase is connected to the inlet with a cupper pipe from where the breathing is made possible.

CONSULT THE NEAREST ALKIN DEALER OR ALKIN FOR REPLACEMENT OR MAINTENANCE.

Pistons:
1st, 2nd and 3rd stg. pistons are connected to the crankshaft via connecting rods. Pistons move up & down and compress the air inside the cylinders with the motion supplied by crankshaft. Have the pistons tested with proper testing equipment in general overhaul periods and replace them if exceeding the tolerance limits mentioned in parts list or having a visible fault.

CONSULT THE NEAREST ALKIN DEALER OR ALKIN FOR REPLACEMENT OR MAINTENANCE.

Safety Valves:
Safety valves are found at the end of each stage of compressor unit. All the safety valves are subject to pressure tests and working pressure are set accordingly. Therefore the safety valves prevent the danger in case of rising pressure in the compressor. Safety Valves are set and sealed by the manufacturer. Do not attempt to break the seal and change the settings of the safety valves. Otherwise you may cause serious injuries or accidents may result in death. Check the safety valves in every general overhaul against leakages, by using a foam water, and replace if necessary. Return the old safety valves back to the manufacturer.

Important

CONSULT THE NEAREST ALKIN DEALER OR ALKIN FOR REPLACEMENT OR MAINTENANCE.

Intake Filter:
Inlet Filter is used to filter the air particles in the first stage. Replace the inlet filter element in the periods shown in Maintenance Table.

1.6.2 Major Components – System

Subbase:
This is the part carrying the motor and compressor and has been supported with 4 vibration mounts.

Filling System:
The system consists of filling hoses resistant to high pressure on the compressor after the final filter; purifier, filling valve, yoke, pressure gauge, and DIN Adapter on the hoses which is required to connect and fill the SCBA cylinders. The number of filling hoses can be increased upon request.

©ALKIN Kompresör Sanayi ve Ticaret Limited Şirketi

Electrical Panel:
It is located at the front view / left section of the compressor. It accommodates all the electrical gear to start the motors and control the system.

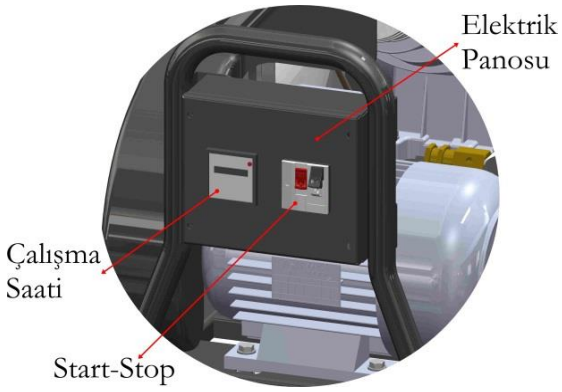

Pressure Switch: (*For Auto Drain Models*)
It is located at the front view / right section of the compressor. This switch both indicates the purifier pressure, and the set pressures on its dial, while serving as a double circuit pressure switch. It controls the start-stop operation of the compressor. The pressure-sensing end of the pressure switch is connected to a port on the purifier; when the pressure inside the purifier reaches the set pressure, it cuts off the control circuit, and stops the electric motor. (See the following section for further details.)

Auto Drain Valves: (*For Auto Drain Models)*
The automatic drain incorporates a small piston with high pressure in the bottom, and low pressure on top; the surface where low pressure acts on is larger than the surface where the high pressure effectively acts on the piston. Therefore the force on the top is larger and causes the piston to sit and seal the high-pressure vent port. The drain valves are controlled by a solenoid mounted on the pilot valve fitting. It receives compressed air from the 2nd stage air inlet and sends it over the 2 drain valves forcing them to close. When the solenoid is de-energized, it removes the control air over the top of the drain valve pistons, allowing the high pressure acting from the bottom of the pistons, to open and perform drain operation.

Electric Motor:
The compressor is driven by an electric motor and is belt driven. There is a hourmeter on the control panel.

Intercoolers and Aftercooler:
These are the cooling tubes that cool down the air getting warmed after compression in stages, which are located in interstages and at the discharge of the final stage of the compressor

INTERCOOLERS AND AFTERCOOLER ARE NOT NECESSARILY REPLACED UNLESS A WEARING, CRACKING OR BREAKING OCCURS.

Water Separators:
They remove the water condensate from the compressed air occurred in stages under pressure. There are two water separators on W31 Series; 2nd and 3rd Stgs.

Purifier:
This is the filtration system that purifies the compressed air to produce breathing air comply with breathing air quality standards. Air compressed in the compressor stages finally enters the purifier. A refillable cartridge which contains the consumables performing the filtration is placed in the purifier housing. Refillable cartridges are more

©ALKIN Kompresör Sanayi ve Ticaret Limited Şirketi

cost effective and environment friendly compared to replaceable cartridges. Consumables inside the cartridge removes the oil, odor and water condensate from the compressed air. Purifier Cartridge should be replaced frequently to prevent a loss in air quality. Compressor can work safely between -10 °C and 50 °C. Lower temperatures may cause blockage, and higher temperatures may diminish purifier's efficiency. There will also be other factors that affect purifier's life. We recommend to replace purifier cartridge every 50 running hours. Condensate water in purifier should be drained with the manual drain valve after each cylinder is filled and compressor is shut off.

Priority Valve:
It does not let the air go unless the inlet pressure of the purifier reaches a certain value (150 Bar). At this pressure the filtration is much more efficient than any pressure.

CONSULT THE NEAREST ALKIN DEALER OR ALKIN FOR REPLACEMENT OR MAINTENANCE.

Check Valve:
It does not let the compressed air inside the purifier goes back to the stages and protects the compressor to run under back pressure.

1.7 Description of Controls

1.7.1 Manual Start

Compressor can be started or stopped by pressing the start / stop button on the control panel.

1.7.2 Auto Stop

If the W31 Mariner is installed with a Pressure Switch, the compressor stops when pressure reaches to the stop pressure set on the pressure switch.

1.7.3 Auto Drain

(For Auto Drain Models)

Springs in automatic drain valves are over the piston in high pressures and under the piston in low pressure valves. Thus, the surface where low pressure acts on is larger than the surface where the high pressure effectively acts on the piston. Therefore the force on the top is larger and causes the piston to sit and seal the high pressure vent port. Automatic drain valves is controlled by a solenoid. It receives compressed air from the 2nd stg. air inlet and sends it over 4 drain valves forcing them to stay closed. When the solenoid is de-energized, it removes the control air on the top of the drain valve pistons, allows the high pressure acting from the bottom of the pistons, to open and perform drain operation.

1.8 Installation

1.8.1 Inspection

The compressor should be inspected and checked for the following when received:

1. Check if any damage exists during shipping, handling, etc.
2. Check the compressor nameplate to verify the equipment confirms the working conditions.
3. Check the electrical motor nameplate to verify the compliance with the available power and electrical supply.
4. Check the compressor if it is filled with oil or not.
5. Check the purifier if the cartridge is installed or not.
6. Check if the intake filter is installed.

©ALKIN Kompresör Sanayi ve Ticaret Limited Şirketi

1.8.2 Location

Important

IMPORTANT – READ CAREFULLY AND FOLLOW THE INSTRUCTIONS BELOW.

Location where the compressor is installed determines to a considerable extent the overall performance and service life of the unit. **Compressor should be located in an area that is dry and sheltered, well ventilated, not exposed to high ambient temperatures, air borne contaminants such as dust, fumes, lint, vapor, steam, gases, engine exhaust and other contaminant.** Install the compressor at least 0.6 meter distance to surrounding walls, to insure adequate cooling and access for service.

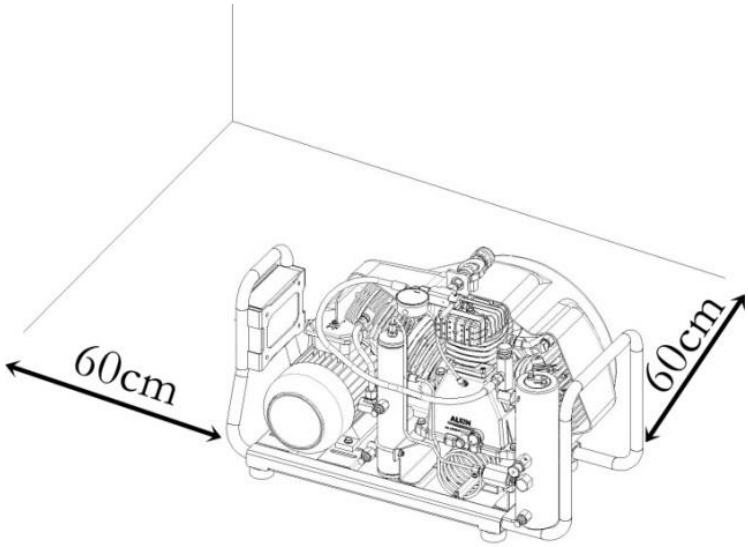

1.8.3 Piping

If piping is required between the compressor and the filling panel or fill station, depending on the length between the compressor and the filling panel properly selected stainless steel pipes must be used. The piping should be installed in full compliance with all Federal, State and local codes, standards and regulations. If required, consult the manufacturer for further information.

1.9.4 Electrical Controls

Important

Although all electrical instructions addressed to the reader directly, the actual inspection, wiring, installation, maintenance, repair, etc. must be carried out by licensed and certified electricians only.

Make electrical connections to the compressor in accordance with the wiring diagrams and in full compliance with all applicable federal, state and local standards, codes and regulations, including those dealing with the earthing requirements. A few electrical checks should be made to insure that the first start-up will be trouble free. Make the following checks before attempting any start up:

©ALKIN Kompresör Sanayi ve Ticaret Limited Şirketi

1. Check line voltage. Verify that the compressor motor corresponds with these specifications.
2. Check the electrical motor nameplate to verify the compliance with the available power and electrical supply.
3. Check tightness of all electrical connections including those in the electrical panel of the compressor.
4. At start up, check the direction of rotation to insure that flywheel rotates to the direction of the arrow on it. Although a few minutes of operation in the wrong direction of rotation will not seriously damage the compressor, it will cause serious damages on the compressor if it runs in this position for a long time as the cooling air flow will be reversed, the compressor cylinders cannot be cooled down and the oil pump will not pump oil, the compressors will run without lubrication.

Check starter and max. load for conformity with the motor power and current data.

1.9.5 Wiring

It is important to select the right size and capacity wire and fuses. Install an isolation switch with magnetic protection and a capacity of three times bigger than the motor full load current on the wall.

1.10 Storage

If the compressor will not be working for a long time for any reason and stored idle during this time, it is suggested to do the following steps before putting it out of reach in order to keep it in good condition:

1. Drain the oil in crankcase. To prevent oxidization, entire inside of crankcase should be applied with a protective oil. To reach inner surfaces, remove valve heads and pour some protective oil towards cylinders. Valve heads also should be applied with a protective oil. Crankcase should be filled with a protective oil and compressor should run for about 10 minutes. Compressor should be applied with a protective oil until next start up.
2. Remove the intake filter.
3. Close all the valves and put a cap onto the intake port against the dust and fumes may enter.
4. The compressor should be stored in a dry, safe and sheltered indoor place.

Note

IF THE COMPRESSOR WILL NOT BE WORKING BUT STORED FOR A LONG TIME AND YOU CAN NOT DO PRECAUTIONS MENTIONED ABOVE, YOU NEED TO OPERATE THE COMPRESSOR AT LEAST TWICE A MONTH FOR 1 HOUR TO LUBRICATE INNER PARTS. IN FAILURE TO DO SO, THE OXIDIZATION MAY ARISE ON THE INNER PARTS AND CAUSE TROUBLE FOR THE OPERATOR AND COMPRESSOR DURING NEXT START-UP.

Note

IF THE COMPRESSOR WILL NOT BE WORKING BUT STORED FOR A LONG TIME; PURIFIER CARTRIDGE WHICH IS TAKEN OUT SHOULD BE COMPLETELY EMPTIED, INNER SURFACE SHOULD BE CLEANED AND DRIED BY BLOWING AIR. IN FAILURE TO DO SO, MAY CAUSE THE PURIFIER CARTRIDGE GET PARTIALLY CONSUMED AND EVEN WASTED.

©ALKIN Kompresör Sanayi ve Ticaret Limited Şirketi

If the compressor will be started-up after a long time of storage, it is suggested to do the following steps before starting filling bottles;

1. Clean the compressor with a clean cloth.
2. Install a new intake filter.
3. Install the purifier cartridge which is just refilled with new chemicals inside the housing.
4. Open the intakes which have been closed while stored against dust, fume, etc. that may enter the compressor.
5. Refill with new oil and check the oil level.
6. Check if there is any leakage and sweating on the gaskets or connections.
7. If the compressor is an Auto Drain Model, auto drain valves should be opened, cleaned and installed back.
   This is a precaution to prevent oxidization on drain valves due to remaining idle for long term and to ensure the proper operation of drain valves.
8. Run the compressor until warmed up, for about 10 minutes, with all the drain valves, filling valve (or outlet valve) opened (the compressor will run against atmospheric pressure with no load).
9. Check for leaks at the connections, fittings, safety valves etc.
10. Put the compressor in normal service.

Not

IF THE COMPRESSOR HAS BEEN STORED WITH THE OLD OIL INSIDE, FIRST RUN THE COMPRESSOR FOR A WHILE AND STOP IT AFTER THE OIL IS WARMED UP, DISCHARGE THE OLD OIL AND REFILL WITH NEW OIL.

1.11 Operation

1.11.1 Initial Start-Up Procedure

Follow up the following procedures when making the initial start-up of the compressor;

1. Make sure that you have read this manual carefully, and understand it. If you have any questions, contact ALKIN.
2. Make sure that all the preparations described in the installation section of this manual have been made.
3. Check the oil level in the crankcase.
4. Check the pressure switch and make sure that the pressure adjustments are set at the proper start-stop Pressures.
5. Rotate the compressor flywheel several times by hand to see that it is free and working properly.
6. Keep all objects such as tools, rugs, etc. away from the compressor.
7. Check the Purifier if the cartridge is installed.
8. Check the direction of rotation. Rotation must be in the direction of the arrow marked on the crankcase and flywheel.
9. Press the start button to start the compressor. Check and verify that there is no abnormal vibration, or any abnormal sounds.
10. Let the compressor run without producing pressure while the purifier drain valve is open for 10 minutes to observe if any abnormalities in the operation of the compressor exists. This way lubrication of all parts will be complete.

©ALKIN Kompresör Sanayi ve Ticaret Limited Şirketi

11. Check the possible leaks in piping. If there is any leak stop the compressor and let it cool down.
12. At the end of 10 minutes running the compressor free, close the purifier drain valve allowing the pressure to rise. Check the last stage safety valve if operating proper or not. The safety valve must open and leak at the pressure stated on it. If the safety valve does not open, stop the compressor without waiting for the pressure to rise up.
13. Fill in the commissioning report and technical data forms. Return a copy to ALKIN for tracking record.
14. To fill cylinders, please read Cylinder Filling Instructions.

1.11.2 Oil Recommendation

The oil level should be checked before each start up. Top up to the overfill point when required 550 ml of oil should be loaded during each replacement.

RECOMMENDED OILS

Oil	Type	Quantity
Anderol 750	Synthetic	550ml
Anderol 555	Synthetic	550ml
Mobil Rarus 829	Synthetic	550ml

- Do not use another type of oil without prior written approval of the compressor manufacturer.
- Do not mix different brand and type of oils.
- If you will change the oil you use with another approved brand of oil, refill with the new oil after you make sure that you drain the old oil completely in the crankcase.
- Refill the oil every 6 months unless you reach the replacement time of the oil stated in the Maintenance Table.

1.11.3 Extremely Cold Ambient Temperatures

Operating conditions different than stated conditions must be reported to the compressor manufacturer to make the necessary changes to adopt the compressor to the current conditions. For instance if the compressor needs to work in an extremely cold ambient temperature below freezing temperatures a crankcase heater can be attached to the crankcase of the compressor to prevent the negative effect of the cold ambient temperatures.

1.11.4 Motor Lubrication

Electric motors on ALKIN W31 Series compressors are supplied with greased and sealed bearings. They do not no need further maintenance.

1.11.5 Adjustments

Pressure Switch Adjustment (*For Auto Drain Models)*

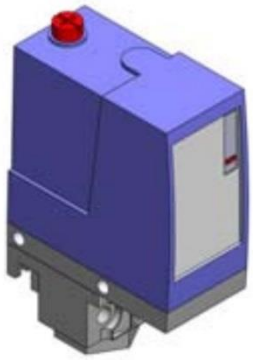

When adjusting pressure switch, verify compressor is operating and make adjustments according to the final outlet pressure.

1. Adjustment is done by rotating the Red Adjustment Screw.
2. You can adjust PH1 pressure switch to the required upper pressure (working pressure) by turning the screw on the pressure switch clockwise or anti-clockwise. Turn the screw clockwise to increase the upper pressure, anti-clockwise to lower.
3. Standard Pressure Switches used on ALKIN have standard differential of 10% of working pressure.

For example, a pressure switch set at 200 bar will work between 180 and 200 bar.

©ALKIN Kompresör Sanayi ve Ticaret Limited Şirketi

Note

Even though there is a monitor scale in the front of Pressure Switch, setting a value from there is very difficult.

Sequential Drain Timers (*For Auto Drain Models)*

These are the drain timers on which the draining times and duration adjustments are made for automatic drain function. On this timers you will find two dials to make the time adjustments. Upwards dial controls the duration of the automatic drain which the drain valve remains open (drains the condensate) It is adjustable between 0 to 10 seconds. The dial does not have figures showing the times on it; it needs to be proportionally adjusted. The full scale shows 10 seconds while half of the scale indicates 5 seconds. The downwards dial is used to adjust the time period of the automatic drain during which the drain valve will remain closed. Draining time periods and duration are adjusted as 5 seconds for every 10 minutes. Factory settings should not be changed for trouble free operation.

Caution!

• Do not adjust the safety valves and do not alter their original settings. Only authorized service technicians are certified to make such adjustments. If required, replace and return the old one for reconditioning to the manufacturer or to a dealer nearest you.

• Do not remove the leaking safety valves and do not replace it with a plug. This may be extremely dangerous. If safety valve leaking, replace it.

1.11.6 Cylinder Filling Instructions

Standard Cylinder Filling

- Start the compressor
- Close 2nd & 3rd stg. manual drain valves if it is open. (Do not necessarily do it if the unit is automatic drain controlled.)
- Close Purifier manual drain valve if it is open.
- Connect and fix the Filling Hose to the bottle as the filling valve is in closed position.
- Close the cylinder valve first.
- Open the lever on the filling valve.
- Open the filling valve on the filling hose and then the cylinder valve when the pressure reaches 150-200 Bar on the pressure gauge on the filling hose.
- Stop compressor (Compressor will auto stop, if auto start/stop controlled) and close the cylinder valve first and then the filling valve when the bottle pressure reaches the desired pressure. (Max. working pressure.)
- Release the pressure in the filling valve and disconnect filling system from cylinder. Drain the condensate collected inside the 2nd and 3rd stg. water separators. (It would be drained automatically if the unit has automatic drain controlled.)

©ALKIN Kompresör Sanayi ve Ticaret Limited Şirketi

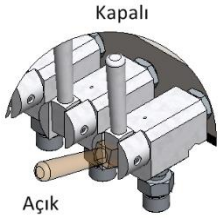

Kollu vana konumları

Dual Pressure Cylinder Filling

200 Bar Cylinder Filling Instruction

- Set the pressure selection valve to 200 Bar.
- Start the compressor.
- Close Purifier manual drain valve if it is open.
- Connect and fix the 200 Bar Filling Hose to the cylinder.
- Close the cylinder valve first.
- Open the 200 bar lever on the filling valve.
- Open the filling valve on the filling hose and then the cylinder valve when the pressure reaches 150-200 Bar on the pressure gauge on the filling hose.
- Compressor will auto stop when the bottle pressure reaches the desired pressure.
- Close the cylinder valve first.
- Close the filling valve. Air inside the filling hose is automatically released by the filling valve when the filling valve is closed.
- Disconnect the cylinder.

300 Bar Cylinder Filling Instruction

- Set the pressure selection valve to 200 Bar.
- Start the compressor.
- Close Purifier manual drain valve if it is open.
- Connect and fix the 300 Bar Filling Hose to the cylinder.
- Close the cylinder valve first.
- Open the 300 bar lever on the filling valve.
- Open the filling valve on the filling hose and then the cylinder valve when the pressure reaches 250-300 Bar on the pressure gauge on the filling hose.
- Compressor will auto stop when the bottle pressure reaches the desired pressure.
- Close the cylinder valve first.
- Close the filling valve. Air inside the filling hose is automatically released by the filling valve when the filling valve is closed.
- Disconnect the cylinder.

Caution!

If you need to fill at 200 bar, right after a filling at 300 bar, release the pressure at filling valve for a short time.

©ALKIN Kompresör Sanayi ve Ticaret Limited Şirketi

2.0 MAINTENANCE

2.1 General

As you proceed through this section, it will be easy to see how simple to maintain the compressor. By following these recommendations, you will get long and trouble free operation from your air compressor. The following are general guidelines for periodical maintenance; specific details will be mentioned in the following chapters. Use the **Maintenance Table** for maintenance and keeping records.

Caution!

Before attempting any maintenance or service work, isolate the compressor by switching off the power and blowing down the pressure inside all equipment like the filters, purifiers, pipings, etc. If a bank system exists, isolate by closing the appropriate valves.

2.2 Maintenance Procedure

DAILY

- Check Oil Level, top up if necessary.
- Drain the condensate from pressure equipment.
- Visually verify that there is no irregularity or abnormality (loose nut, screw, unusual sounds, loose V-belt, leaking pipes, etc.
- When compressor is working, verify that the pressure on gauges are between Min. and Max. values.

WEEKLY

- Verify that inlet filter is not blocked or pierced.
- For sufficient cooling, clean with a cloth flywheel, intercoolers, aftercooler and cylinders.
- Check the tension of V-belt. Proper tension should be adjusted to give about 13 mm (½ ") deflection with a 1 kg (2 pnds) pressure is applied at the center of the belt.

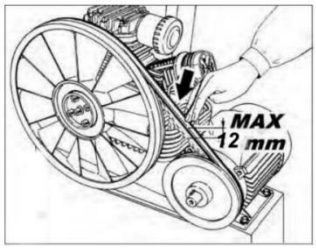

THREE MONTHS MAINTENANCE (*Based on 8hr/day)

- Check the valves for leaks.
- Replace filter cartridge.
- Clean with a cloth intercoolers and aftercooler and flywheel.
- If unusual stage pressures observed, clean all valves.
- Replace oil in crankcase.
- Replace intake filter.
- Replace purifier cartridge.
- Tighten all screws and nuts. (Use reasonable force. If you are unsure, use torque wrench.)
- Check valves and verify that there is no accumulation of carbon or dust on them.

ANNUAL MAINTENANCE BAKIM (*Based on 8hr/day)

- Check the valves for leaks.
- Replace filter cartridge.
- Clean with a cloth intercoolers and aftercooler and flywheel.
- If unusual stage pressures observed, clean all valves.
- Replace oil in crankcase.
- Replace intake filter.
- Replace purifier cartridge.
- Replace Yoke, Filling Valve and Hoses.
- Replace Gauges.
- Replace V-Belt
- Replace O-rings and gaskets.
- Replace rings.
- Replace Safety Valves.

©ALKIN Kompresör Sanayi ve Ticaret Limited Şirketi

2.3 Maintenance Table

2.3.1 Maintenance – Check Table

Check Time	Part	Instruction no
Daily	Check oil level	01
	Check for leaks	02
	Check pressure and gauges	-
	Condensate should be drained from purifier by opening manual drain valve located below purifier after each filling and day. Also, auto drain valves should be check to see if they are draining for 6 seconds at every 7 minutes. CONSULT ALKIN IF UNSURE.	03
	Open the manual drains beneath water separator's at every 7 minutes to drain condensate water.	-
Weekly	Check intake filter.	04
	Check V-belt	05
	Check components	06
	Clean intercoolers and aftercooler and flywheel	07
	Check current	08
	Check wiring	-
500 Hours	Check safety valves, replace if necessary.	09
1000 Hours	Check the check valve, replace if necessary	10 10-01
	Check priority valve, replace if necessary	11 11-01
	Check belts, replace if necessary	12 12-01
	Check oil KEÇE, replace if necessary	contact ALKIN
Annual	Purifier should be tested by authorized third parties	

©ALKIN Kompresör Sanayi ve Ticaret Limited Şirketi

2.3.2 Replacement Table

Replacement Time	No	Explanation	Qty.	Instruction no.
50 Hrs.	1	Purifier Refill Kit Note: Refilling time of cartridge may vary depending on the ambient temperature and humidity.	1 piece	13
100 Hrs.	1	Oil	550 ml	16
300 Hrs.	1	Intake filter element	1 piece	14
500 Hrs.	1	Calibrate auto drain valves with auto drain maintenance kit. (For auto drain models.)	1 set	15
1000 Hrs.	1	Ring	1 set	17
	2	Valve	1 set	
	3	Gasket Set	1 set	
	4	O-ring Set	1 set	

Important

COMPRESSOR PARTS WHICH ARE MADE OF CASTING SHOULD BE MEASURED AND INSPECTED WITH THE SUITABLE MEASUREMENT TOOLS DURING GENERAL SERVICE OR MAINTENANCE. THE PARTS WHICH MEASURED OUT OF THE TOLERANCE RATES STATED IN THE PARTS BOOK NEED TO BE REPLACED WITH THE NEW PARTS.

Caution!

IMPORTANT: PLEASE BE ADVISED THAT COMPRESSORS WHICH ARE NOT MAINTAINED ACCORDING TO ALKIN MAINTENANCE TABLES ABOVE WOULD BE OUT OF WARRANTY.

©ALKIN Kompresör Sanayi ve Ticaret Limited Şirketi

2.4 Torque Values

The following table indicates the torque values to which a torque wrench should be set for tightening the various size attaching bolts & nuts. Use these values to set a torque wrench to tighten these fasteners at intervals indicated in the MAINTENANCE TABLE.

TORQUE VALUES TABLE

Bolt or Screw	Thread	Max Torque
Hex and allen head	M6	10 Nm (7 ft.lbs)
Hex and allen head	M8	25 Nm (18 ft.lbs)
Hex and allen head	M10	45 Nm (32 ft.lbs)
Hex and allen head	M12	75 Nm (53 ft.lbs)
Hex and allen head	M14	75 Nm (53 ft.lbs)
Hex and allen head	M16	200 Nm (141 ft.lbs)
Pipe Connectors (Swivel Nuts)		Finger-tight+1/2turn

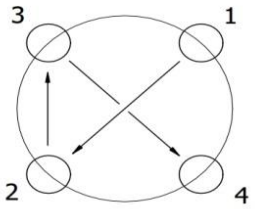

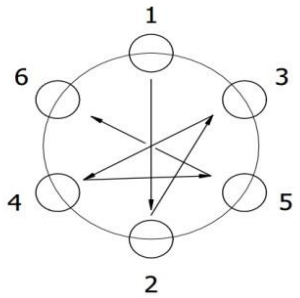

2.5 Maintenance Instructions

2.5.1 Oil Level Check

Instruction no	01
Instruction name	Oil Level Check
List of tools required	None
No of persons required	1 person
Estimated Completion Time	5 minutes
Parts list to be used in replacement kit	None

- Oil level can be visually checked through oil level glass in the front of crankcase. Oil level should be below the red line.
- Refill oil if needed.

2.5.2 Leak Check

Instruction no	02
Instruction name	Leak Check
List of tools required	Bowl, sponge, foam water
No of persons required	1 person
Estimated Completion Time	20 minutes
Parts list to be used in replacement kit	None

- Listen to compressor while working and check for unusual sounds.
- If there is an unusual sound, try to detect the source.
- Detect and tighten the screw, nuts, fittings, etc.

©ALKIN Kompresör Sanayi ve Ticaret Limited Şirketi

- Put foam water with sponge on where the leak is, tightened connectors. Check if leaking is no more.
- Wipe the foam water off the compressor.

2.5.3 Auto Drain Valves Check

Instruction no	03
Instruction name	Auto Drain Valves Check
List of tools required	None
No of persons required	1 person
Estimated Completion Time	10 minutes
Parts list to be used in replacement kit	None

While working, compressor should drain for 5 seconds at every 10 minutes.

2.5.4 Intake Filter Check

Instruction no	04
Instruction name	Intake Filter Check
List of tools required	Clean cloth
No of persons required	1 person
Estimated Completion Time	5 minutes
Parts list to be used in replacement kit	None

- Check intake filter element at every 50 running hours and clean with pressurized air from inside towards outside.

Depending on ambient temperature and humidity, replace filter element at most every three months.

2.5.5 V-belt Alignment Check

Instruction no	05
Instruction name	V-belt Tension Check
List of tools required	None
No of persons required	1 person
Estimated Completion Time	5 minutes
Parts list to be used in replacement kit	None

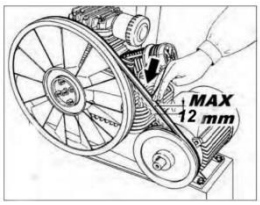

- Check the V-belt tension. The proper tension should allow 13 mm (½") deflection with a 1 kg (2 pounds) weight applied on the center of each belt.

2.5.6 Components Check

Instruction no	06
Instruction name	Components Check
List of tools required	Appropriate tools
No of persons required	1 person
Estimated Completion Time	10 minutes
Parts list to be used in replacement kit	None

- Stop the compressor. Make sure the compressor is cooled down.

©ALKIN Kompresör Sanayi ve Ticaret Limited Şirketi

- Appropriate tool is selected depending on the component, dual tighten the component according to their torque values.
- Check with foam water for leaks. Mind electrical components. Wipe the foam water off the compressor.

2.5.7 Serpentines, Intercoolers and Aftercooler, Flywheel Cleaning

Instruction no	07
Instruction name	Serpentines, Intercoolers and Aftercooler, Flywheel Cleaning
List of tools required	Cloth
No of persons required	1 person
Estimated Completion Time	5 minutes
Parts list to be used in replacement kit	None

- Clean dust on serpentines, intercoolers and aftercooler, flywheel with 6-7 bar pressurized air.
- Wipe if necessary.

2.5.8 Current Check

Instruction no	08
Instruction name	Current Check
List of tools required	Amperemeter
No of persons required	1 person
Estimated Completion Time	5 minutes
Parts list to be used in replacement kit	None

- Check with an amperemeter at max. load for conformity with the motor power and current data

2.5.9 Safety Valve Check

Instruction no	09
Instruction name	Safety Valve Check
List of tools required	foam water
No of persons required	1 person
Estimated Completion Time	10 minutes
Parts list to be used in replacement kit	None

- Start the compressors. While it is working, put foam water on valves and check for leaks. Replace valves if necessary.

2.5.9.1 Safety Valve Replace

Instruction no	09-01
Instruction name	Safety Valve Replacement Instructions
List of tools required	appropriate tools, foam water
No of persons required	1 person
Estimated Completion Time	10 minutes
Parts list to be used in replacement kit	None

- Remove the problematic safety valve with the appropriate tool. Start the compressor and verify teflon tape parts are removed from valve hole. Then stop the compressor.

©ALKIN Kompresör Sanayi ve Ticaret Limited Şirketi

- Wrap Teflon tape on the new safety valve and put it on its place and tighten with appropriate tool.
- Start the compressors. While it is working, put foam water on valves and check for leaks.

2.5.10 Check Valve Check

Instruction no	10
Instruction name	Check Valve Check
List of tools required	appropriate tools, foam water
No of persons required	1 person
Estimated Completion Time	10 minutes
Parts list to be used in replacement kit	None

- Start the compressor. When purifier is pressurized, remove check valve inlet pipe. Check for leaks with foam water. Reconnect the pipe if no leaks. If leaking, replace check valve.

2.5.10.1 Check Valve Replacement

Instruction no	10-01
Instruction name	Check Valve Replace
List of tools required	appropriate tools, foam water
No of persons required	1 person
Estimated Completion Time	10 minutes
Parts list to be used in replacement kit	None

- If check valve is leaking, remove it with appropriate tool.
- Clean its place and install the new check valve.
- Start the compressor. Check for leaks with foam water.

2.5.11 Priority Valve Check

Instruction no	11
Instruction name	Priority Valve Check
List of tools required	None
No of persons required	1 person
Estimated Completion Time	10 minutes
Parts list to be used in replacement kit	None

- Open all drain valves and start the compressor. Close all drain valves.
- When gauge on compressor's outlet hose is at 150 bar, check if filling valves are being pressurized. If no pressure at filling valves, priority valve is malfunctioning. Replace it.

2.5.11.1 Priority Valve Replacement

Instruction no	11-01
Instruction name	Priority Valve Replace
List of tools required	None
No of persons required	1 person
Estimated Completion Time	10 minutes
Parts list to be used in replacement kit	None

- Stop the compressor and verify complete depressurization.
- Priority valve is located at the outlet of purifier.

©ALKIN Kompresör Sanayi ve Ticaret Limited Şirketi

- Remove all hoses and pipes connected to priority valve.
- Remove priority valve with appropriate tool. Clean its place.
- Wrap teflon tape on the new priority valve and put it on its place and tighten with appropriate tool.
- Reconnect all hoses and pipes connected to priority valve.
- Start the compressor. New priority valve should allow air flow at 150 bar.

2.5.12 V-Belt Replacement

Instruction no	12
Instruction name	V-belt Replace
List of tools required	appropriate tools
No of persons required	1 person
Estimated Completion Time	10 minutes
Parts list to be used in replacement	None

- Stop the compressor and verify complete depressurization.
- Remove flywheel grid with appropriate tools.
- Remove belts from flywheel and install new ones. Rotate flywheel by hand to check tension.

Reconnect flywheel grid with appropriate tools. Start the compressor and check the proper rotation.

2.5.13 Purifier Cartridge Refill Kit Replacement

Instruction no	13
Instruction name	Purifier Cartridge Refill Kit Replace
List of tools required	Appropriate tools
No of persons required	1 person
Estimated Completion Time	20 minutes
Parts list to be used in replacement	P21 Purifier Refill Kit

- Stop the compressor and verify complete depressurization of purifier with manual drain.
- Verify purifier gauges is 0.
- Rotate the screws counter clockwise to remove purifier head. (When removing the head, purifier cartridge will come along.)
- Remove the cartridge from the head.
- Refill the cartridge according to the instruction in the refill kit.
- Oil the O-rings with appropriate oil and install them onto purifier head.
- Purifier top head O-rings and threads, and purifier ass'y threads are cleaned and oiled, assembled. After tightening for 20 mm, you may need a wrench to tighten properly.

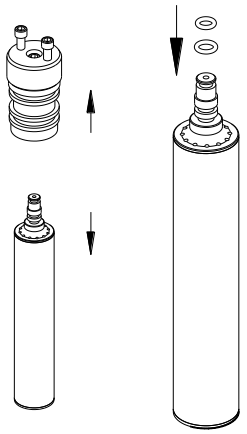

2.5.14 Intake Filter Replacement

Instruction no	14
Instruction name	Intake Filter Replace
List of tools required	cloth
No of persons required	1 person
Estimated Completion Time	5 minutes
Parts list to be used in replacement	Intake filter element

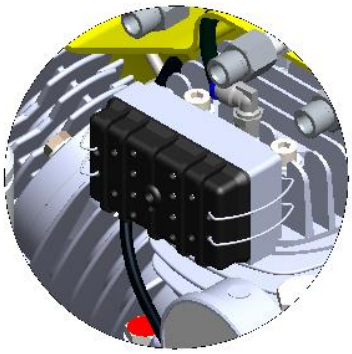

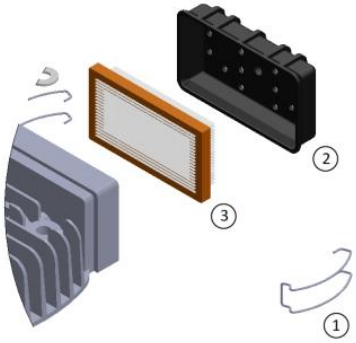

- Remove the wires (1) holding the inlet filter head (2).
- Remove inlet filter head (2).
- Replace intake filter element (3).
- Reconnect the wires (1) on the head (2).

2.5.15 Auto Drain Valve Adjustment with Repair Kit

Instruction no	15
Instruction name	Auto Drain Valve Adjustment with Repair Kit
List of tools required	
No of persons required	1 person
Estimated Completion Time	
Parts list to be used in replacement	

- Stop the compressor.
- Verify complete depressurization of pressure equipment.
- Remove the piping of auto drain valve with appropriate tools.
- Remove the auto drain valve head with no.27 tool with counter clockwise rotation.

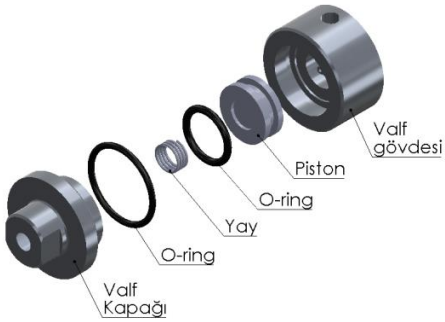

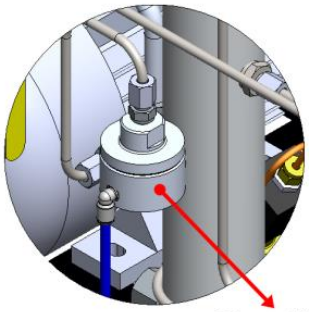

- Remove from the auto drain valve old pistons and spring and clean auto drain valve ass'y with pressurized air.
- Take the new piston and spring from the manufacturer's repair kit. Verify that o-ring on the auto drain valve head is installed (and oiled). Then, install the new piston Teflon side downwards onto the assy. Then, install the spring onto the spring housing on the piston.
- Tighten the valve head with no.27 tool. After tightening, slightly loosen it with rotating no.27 tool counter clockwise. This is done so

©ALKIN Kompresör Sanayi ve Ticaret Limited Şirketi

that the piston is well placed.

- Reconnect the piping of auto drain valve with appropriate tools
- Start the compressor and verify that the drain valve is operating within drain intervals.

2.5.16 Oil Change Instructions

Instruction no	16
Instruction name	Oil Change Instructions
List of tools required	funnel, bowl
No of persons required	1 person
Estimated Completion Time	20 minutes
Parts list to be used in replacement	Anderol 750 oil

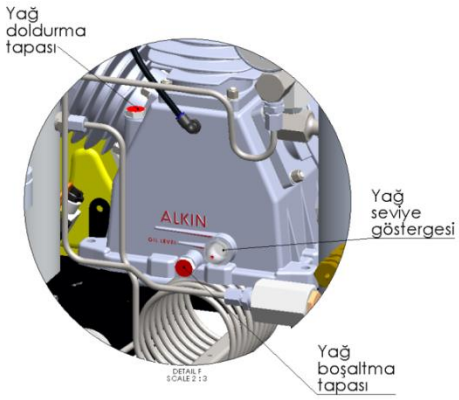

- Start the compressor and run for 5 minutes to warm up the oil. Then stop the compressor.
- Remove oil top cap with a no.17 wrench.
- Put a funnel and a bowl below the oil drain plug.
- Remove oil drain cap with a no.17 wrench.
- Wait until all oil is drained.
- Reinstall oil drain cap with a no.17 wrench.
- Refill with new ANDEROL 750 oil.
- Reinstall oil top cap with a no.17 wrench.

2.5.17 Valve Replace Instructions

2.5.17.1 Initial Operational Check for Valves

After roughly half an hour's operation, valves should be checked. Note that intake line to valve heads should be hand warm and outlet-piping should be hot.

Should the intake pipe to the valve head of second stg. heat up excessively, and first stg. safety valve blow off, this would be an indication that either intake or pressure valve of second stg. is malfunctioning. It is, therefore, necessary to remove the valve head and check these valves, and/or to replace them.

2.5.17.2 General Instructions for Changing the Valves

- Always replace valves as a complete set.
- Carefully clean dirty valves. Never use a sharp tool for this purpose. Soak the valves in diesel oil or petroleum and clean with soft brush.
- Check individual components for excessive wear. If the valve seat and valve disks are dented, replace the valves.
- Valve head screws and nuts must be tightened with a torque wrench.
- Check the valve space in the valve heads for dirt, and clean if necessary.
- Use only appropriate gaskets and O-rings on reassembly.
- During reassembly, reassemble step by step.
- After finishing all maintenance work on the valves, turn the compressor manually using the flywheel and check whether all items have been correctly installed.

©ALKIN Kompresör Sanayi ve Ticaret Limited Şirketi

- 30 minutes after restarting the compressor, stop it, let it cool down to ambient temperature and retighten valve screws and cap nuts. Otherwise, valves could work loose due to settings of the gaskets.
- Remove and check the valves every 1000 operating hours.
- Replace the valves every 2000 operating hours to avoid fatigue failure.

2.6 Abrasion Limits

Crankcase:

Con-rod side : Ø22 / Ø21.99

Bearings Side : Ø35 / Ø35.005

Ø30 / Ø30.005

Con-rods:

Crankshaft side : Ø22.04 / Ø22.05

Piston side : Ø14 / Ø14.01

Piston pin : Ø14 / Ø13.99

Piston:

1. stg. : Ø66.68 / Ø66.63

2. stg. : Ø38 / Ø37.95

3. stg. : Ø14 / Ø13.95

Cylinder

1. stg. cylinder : Ø66.68 / Ø66.73

2. stg. cylinder : Ø38 / Ø38.04

3. stg. cylinder : Ø14 / Ø14.04

©ALKIN Kompresör Sanayi ve Ticaret Limited Şirketi

3.0 Troubleshooting

3.1 COMPRESSOR WILL NOT OPERATE	
• No power	Turn power key ON.
• Motor starter overload tripped	Start and check if trips again. If it does, check if compressor in not staying under load.
• Pressure switch not making contact	Check all the terminals and wires. If pressure switch is defective, replace it.

3.2 EXCESSIVE NOISE DURING OPERATION	
• Loose sheave, flywheel, belt, belt-guard, intercooler, bolts or accessories	Detect and tighten.
• Faulty vibration mounts	Check if the mounts are in good condition; if damaged, replace.
• Lack of oil in the crankcase	a. Check for possible damage to bearings. b. Refill oil and check if the noise persists
• Piston hitting the valve plate	Remove the compressor cylinder head; replace the gasket with the brand new gasket and reassemble.
• Deflected crankshaft or crankshaft bearing failure	Replace the crankshaft.
• Excessive dirt or carbon on piston(s)	Remove the compressor air heads; clean pistons and valve(s), or replace if worn; reassemble.

3.3 COMPRESSOR KNOCKS	
• Crankshaft bearing failure	Replace bearings or crankshaft assembly.
• Connecting rod journal bearings worn	Replace the connecting rods; if worn, replace the crankshaft bushing center as well.
• Wrist pins and journals are worn	Replace complete pin and rod assembly.

3.4 MILKY OIL IN THE CRANKCASE	
• High moisture and dirt content in the ambient air	a. Pipe air intake from less humid source. b. Change oil more frequently.

3.5 EXCESSIVE OIL CONSUMPTION	
• Restricted air intake	Replace intake filter element.
• Oil leaks.	Tighten bolts and fittings; replace gaskets
• Worn piston rings	Replace piston rings.
• Low oil viscosity	Drain oil; refill with oil of proper viscosity
• Piston rings misassembled	If piston rings are upside down, install in proper position.
• Compressor tilted too much	Level compressor.
• Scored or worn cylinder(s).	Replace cylinders.

©ALKIN Kompresör Sanayi ve Ticaret Limited Şirketi

3.6 OIL IN DISCHARGE AIR	
• Restricted air intake	Replace intake filter element, check for other restrictions at the inlet.
• Worn piston rings	Replace piston rings
• Excessive oil in the crankcase	Drain to the overflow level
• Low oil viscosity	Drain oil; refill with oil of proper viscosity
• Piston rings misassembled	If piston rings are upside down, install in proper position.
• Consumed purifier cartridge filling kit	Refill the Purifier cartridge with refilling kit.

3.7 COMPRESSOR VIBRATES	
• Mounting bolts are loose	Tighten the mounting bolts.
• Compressor not properly mounted	Level the compressor so that all feet touch the floor.
• Motor belt and the sheave misaligned	Align.

3.8 AIR BLOWING OUT OF INLET	
• Broken 1st stg. inlet valve	Replace its spring and disc.

3.9 INSUFFICIENT AIR AT THE POINT OF USE	
• Leaks or restrictions	Check for leaks and restrictions in the piping and hoses.
• Restricted air intake	Replace the intake filter element
• Slipping belts	Tighten the belts.
• Excessive air consumption	a. Limit the air consumption to the capacity of the compressor. b. Increase your air capacity with an additional compressor unit.
• Worn piston rings	Replace piston rings.
• Worn cylinders	Replace cylinders.

3.10 PRESSURE VESSELS DO NOT HOLD THE PRESSURE WHEN THE COMPRESSOR IS UNLOADED	
• Check valve leaks	Relieve the pressure vessels and replace the check valve.
• Excessive leaks in the plant piping	Check the pipings, repair the leaks.

CAUTION!

DO NOT SERVICE TANK, VALVES, PIPING, etc. WHILE COMPRESSED AIR EXISTS IN THE SYSTEM. DRAIN THE AIR INSIDE BEFORE ATTEMPTING ANY REPAIRS.

3.11 EXCESSIVE BELT WEAR	
• Sheaves misaligned	Realign the motor sheave and the flywheel.
• Belts too tight	Adjust tension
• Belts too loose	Adjust tension
• Sheave or crankshaft wobble	Check for worn or bent crankshaft, keyway or sheave

©ALKIN Kompresör Sanayi ve Ticaret Limited Şirketi

	bore

3.12 EXCESSIVE DISCHARGE AIR TEMPERATURE	
• Dirty valves / carbon on valves	Remove valves; clean or replace.
• Dirty intercoolers and/or cooling surfaces	Clean cooling surfaces of the cylinders, intercoolers and aftercooler.
• Poor ventilation and air circulation	Relocate the compressor, improve ventilation.
• Blown head gasket	Replace the head gasket.
• Restricted air intake	Replace the intake filter element.
• Worn valves	Repair or replace valves.
• Compressor rotating in the wrong direction	Correct the direction of rotation
• Low oil level	Check and refill.

3.13 AIR LEAKING FROM THE INTERSTAGE SAFETY VALVE	
• Safety valve faulty	Replace the safety valve.
• Inlet valve of the next stage leaks	Remove the valves; clean or replace.
• Inlet valve of the next stage is broken	Remove the valves; replace.

3.14 CYLINDER PRESSURE BUILDS UP SLOWLY	
• Restricted air intake	Replace the intake filter element.
• Blown cylinder gasket	Install a new gasket.
• Worn or broken valves	Replace valves.
• Air leaks in the system	Check for leaks; fix the problem
• Loose belts	Adjust tension
• Low Compressor Speed	Check RPM

3.15 RECEIVER PRESSURE BUILDS UP TOO FAST	
• Water in the system	Drain the system more often.
• High compressor speed	Check RPM

3.16 COMPRESSOR DOESN'T UNLOAD WHEN STOPPED	
• Automatic drain valves blocked	Check, disassemble and clean the drain valves; install new o-ring and seat if necessary.
• Solenoid valve faulty	Check and replace solenoid valve.

3.17 AUTOMATIC DRAIN VALVES DO NOT DRAIN	
• Automatic drain valves blocked	Check, disassemble and clean the drain valves; install new o-ring and seat if necessary.
• Solenoid valve faulty	Check and replace solenoid valve.

3.18 AUTOMATIC DRAIN VALVE(S) REMAIN(S) OPEN ALL THE TIME	
• Low 2nd stg. control air pressure	Check the interstage pressures.
• Solenoid Valve faulty	Replace solenoid valve.
• Blocked drain valve(s)	Clean the drain valve(s).

3.19 COMPRESSOR WILL NOT COME UP TO NOMINAL OPERATING SPEED	
• Low voltage	Check the line voltage.
• Motor and control panel connectors	Check it, tighten if needed.

©ALKIN Kompresör Sanayi ve Ticaret Limited Şirketi

loosen	
• Poor power regulation (unbalanced phases)	Notify the power company.

3.20 UNUSUAL PISTON, RING OR CYLINDER WEAR	
• Improper oil	Replace with the proper oil.
• Low oil level	Check the oil level and fix the problem, refill oil.
• Extremely dirty ambient conditions	Pipe the intake filter to a cleaner location if possible; alternatively use a heavy duty two stage filter.
3.21 ODOR IN DISCHARGED AIR	
• Purifier cartridge saturated	Replace the cartridge.
• Improper oil	Replace with the proper oil.
• Wrong direction of rotation	Check the arrow; the compressor flywheel must blow air onto the cylinders; if the direction of rotation is wrong, reverse the phases and make sure it is running in the right direction.
• Carbonization on valves	Clean; make sure that the ambient temperatures are within permissible limits.

©ALKIN Kompresör Sanayi ve Ticaret Limited Şirketi

Section
4

4.0 Parts List

Parts List

©ALKIN Kompresör Sanayi ve Ticaret Limited Şirketi

©ALKIN Kompresör Sanayi ve Ticaret Limited Şirketi

4.1 Crankcase ass'y

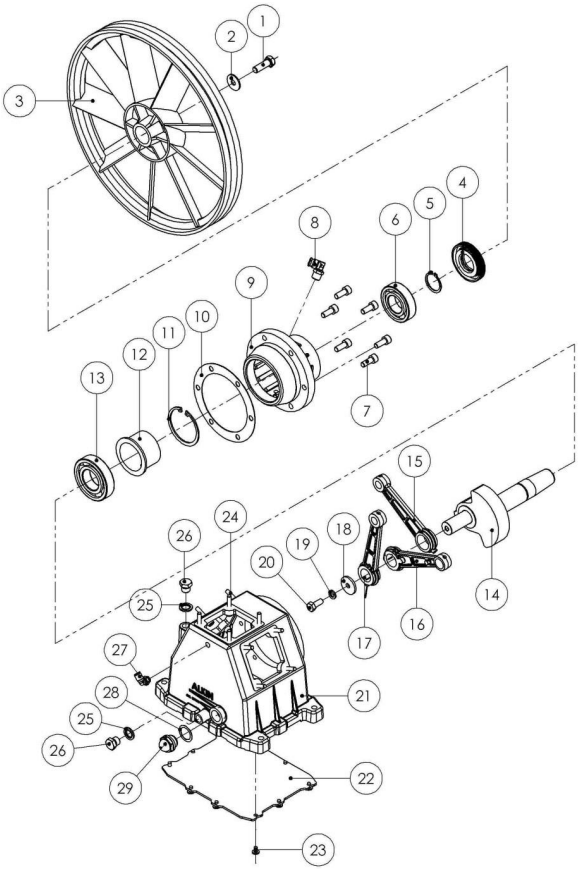

No	Part nr.	Description	Qty.
1	AYD-521	Bolt	1
2	6885-01	Washer	1
3	6998-01	Flywheel	1
4	7101-08	Oil seal	1
5	3002-71	DIN 472-30 ring	1
6	3002-24	Bearing	1
7	6882-09	Allen screw-M8x20	6
8	7187-23	Elbow-1/4xØ8 plastik	1
9	3002-27	Hub	1
10	3002-88	Gasket	1
11	7869-01	DIN 472-62 ring	1
12	3002-86	Spacer	1
13	3002-25	Bearing	1
14	7000-09	Crankshaft	1
15	3004-47	Rod-3rd stage	1
16	3004-46	Rod-2nd stage	1
17	3005-10	Rod-1st stage	1
18	3002-85	Washer	1
19	7091-11	Spring washer-M8	1
20	7867-41	Bolt-M8x20	1
21	6904-07	Crankcase	1
22	3002-09	Cover	1
23	7096-93	Bolt-M5x8	10
24	6882-11	Allen screw-M6x30	12
25	6821-08	Bonded seal-1/4"	2
26	AYD-85	Plug-1/4"	2
27	7187-06	Elbow Fitting-1/8xØ6 Plastik	1
28	AYD-522	Gasket	1
29	6902-06	Oil level gage	1

©ALKIN Kompresör Sanayi ve Ticaret Limited Şirketi

4.2 First Stage

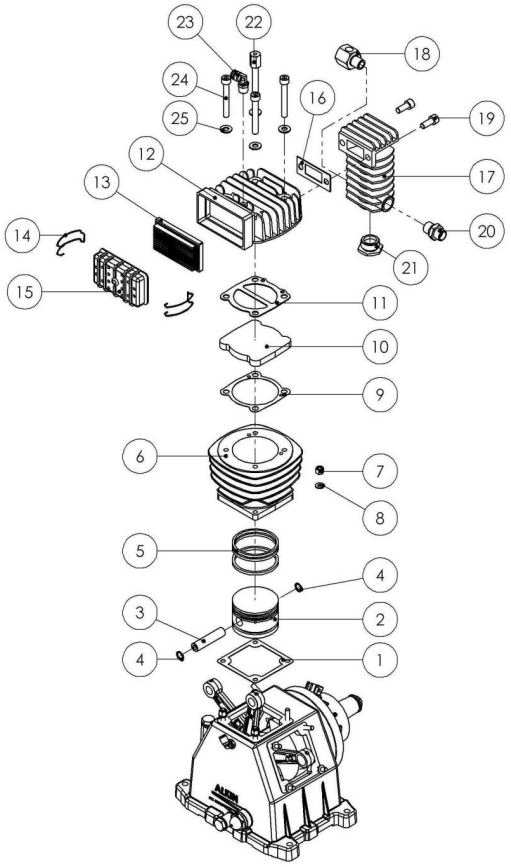

No	Part nr.	Description	Qty.
1	3002-60	Gasket	1
2	AYD-50	Piston-1st stage	1
3	AYD-51	Piston pin-1st stage	1
4	7003-02	DIN 472-12 ring	2
5	AYD-52	Ring set-1st stage	1
6	6871-01	Cylinder-1st stage	1
7	3002-75	Nut-M6	4
8	7091-08	Washer-M6	4
9	AYD-54	Gasket	1
10	AYD-30	Complete valve-1st stage	1
11	AYD-55	Gasket	1
12	AYD-27	Cylinder cover-1st stage	1
13	3001-46	Filter elemet	1
14	3001-47	Filter wire	2
15	3001-45	Filter cover	1
16	AYD-56	Gasket	1
17	AYD-29	Cooler	1
18	7672-14	Elbow-3/8"x1/4"x1/8	1
19	6882-09	Allen screw-M8x20	8
20	AYD-124	Nipple-3/8"xØ12	1
21	7083-16	Plug-3/4" Al.	1
22	3003-53	Socket	1
23	7187-23	Elbow fitting-1/4xØ8 plastik	2
24	6882-03	Bolt-M8x60	3
25	7091-09	Washer-M8	4

©ALKIN Kompresör Sanayi ve Ticaret Limited Şirketi

4.3 Second stage

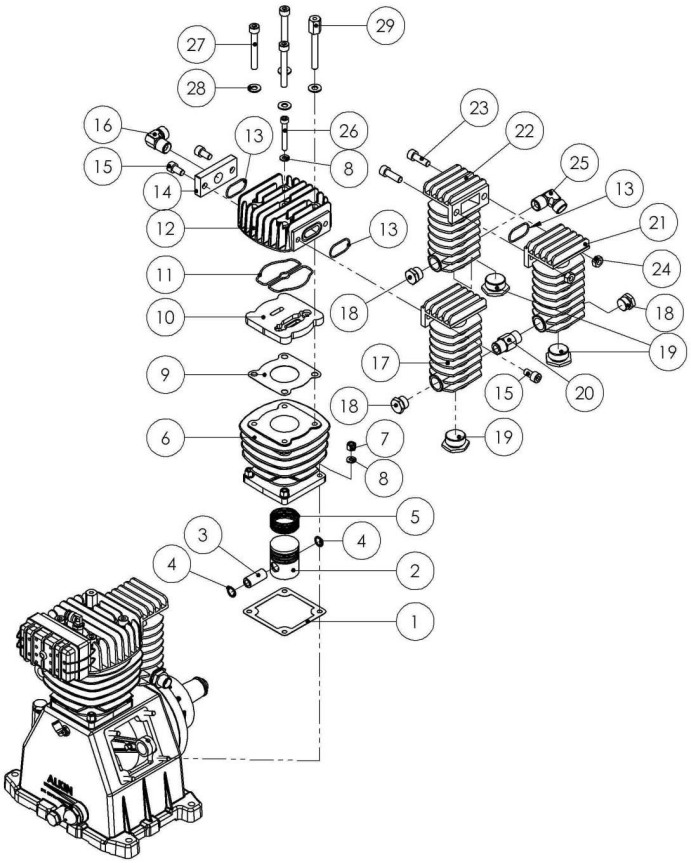

No	Part nr.	Description	Qty.
1	3002-60	Gasket	1
2	6836-02	Piston-2nd stage	1
3	6837-01	Piston pin-2nd stage	1
4	3002-72	DIN 472-14 ring	2
5		2nd stage ring set	
5.1	7009-03	Compression ring	2
5.2	7009-04	Stripper	2
6	6834-01	Silindir-2. Kademe	1
7	3002-75	Nut-M6	4
8	7091-08	Washer-M6	5
9	3002-67	Gasket	1
10	6897-04	Complette valve-2nd stage	1
11	3004-72	O-ring-2ng stage valve	2
12	AYD-28	Cylinder cover-2nd stage	1
13	ayd-101	O-ring-27,50x1,78	3
14	3003-56	Cover flange-2nd stage	1
15	6882-07	Allen screw-M8x15	4
16	3003-88	Dirsek fitting-3/8”xØ12 BSP	1
17	ayd-29	Cooler	1
18	7083-03	Plug-3/8”	3
19	ayd-86	Plug-3/4”	3
20	3002-58	Nipple-3/8”x3/8”	1
21	3004-16	Cooler	1
22	3004-37	Cooler	1
23	6882-06	Allen Screw-M8x25	2
24	6884-01	Nut-M8	2
25	ayd-59	Elbow fitting-3/8”xØ12 NPT	1
26	6882-13	Allen Screw-M6x45	1
27	6882-03	Bolt-M8x60	3
28	7091-09	Washer-M8	4
29	3003-53	Socket	1

©ALKIN Kompresör Sanayi ve Ticaret Limited Şirketi

4.4 Third stage

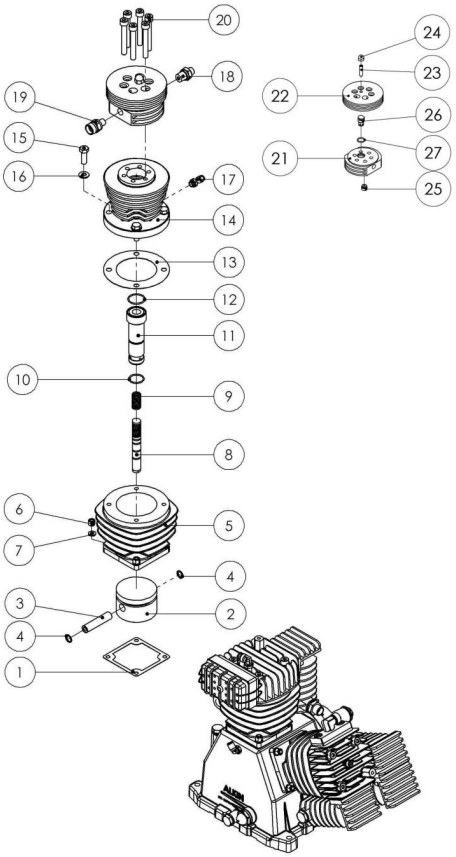

No	Part nr.	Description	Qty.
1	3002-60	Gasket	1
2	3002-69	Guide piston-3rd stage	1
3	AYD-51	Piston pin-1st stage	2
4	7003-02	DIN 472-12 ring	2
5	6871-02	Guide piston-3td stage	1
6	3002-75	Nut-M6	4
7	7091-08	Washer-M6	4
8	7720	Piston-3rd stage	1
9	7010-01	Compression ring-3rd stage	7
10	7729-20	O-ring-21,95x1,78	1
11	6841-01	Cylinder-3rd stage	1
12	7729-21	O-ring-25,12x1,78	1
13	3002-68	Gasket-Guide cylinder	1
14	6842-01	Cylinder-3rd stage	1
15	6882-14	Bolt-M8x25	4
16	7091-09	Washer-M8	4
17	7187-06	Elbow Fitting-1/8xØ6	2
18	7422-01	Nipple-1/4"xØ6	1
19	7424-01	Nipple-1/4"xØ12	1
20	7867-58	Allen screw-M8x60	6
21	6843-01	Valve cover-3rd stage	1
22	6844-01	Top cover-3rd stage	1
23	7867-82	Valve bolt-3rd stage	1
24	6883-04	Nut	1
25	6815-00	Inlet valve-3rd stage	1
26	6814-00	Discharge valve-3rd stage	1
27	6893-09	O-ring	1

©ALKIN Kompresör Sanayi ve Ticaret Limited Şirketi

4.5 General piping (standart)

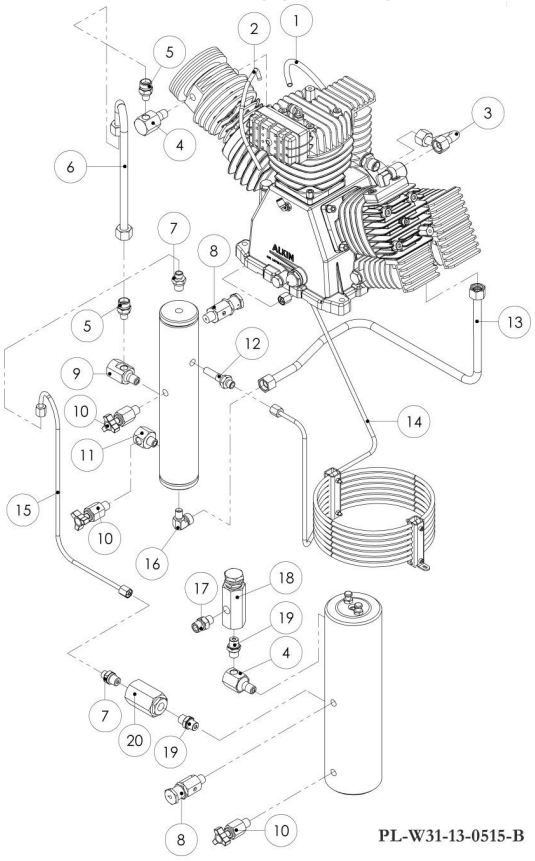

No	Part nr.	Description	Qty.
1	6908-16	Hose – Crankcase-Suction	1
2	6908-17	Lubrication Hose – 3rd Stg.	1
3	6908-05	Tube – 1st-2nd Stg.	1
4	7084-02	Elbow(1/4-1/4)	2
5	7424-01	Nipple-1/4"xØ12	2
6	2000-13	Tube – 3rd Stg-Water Seperator	1
7	7422-01	Nipple-1/4"xØ6	3
8	7933-17	Safety Valve-110 Bar	2
9	7084-03	Elbow	1
10	7020-00	Drain Valve	3
11	7672-12	Elbow 1/4"x1/4 "	1
12	7663-06	Nipple	1
13	6908-06	Tube – 2nd Stg. Water Seperator	1
14	6908-20	Aftercooler	1
15	2000-14	Intermediate Tube	1
16	7672-18	Elbow-3/8"xØ12 BSP	1
17	7890-01	Nipple 1/4" x 1/4"	1
18	6460-01	Priority Valve	1
19	7078-41	Nipple 1/4"NPT x 1/4" NPT	2
20	7140-01	Check Valve	1

©ALKIN Kompresör Sanayi ve Ticaret Limited Şirketi

4.6 General piping (Optional-Auto drain)

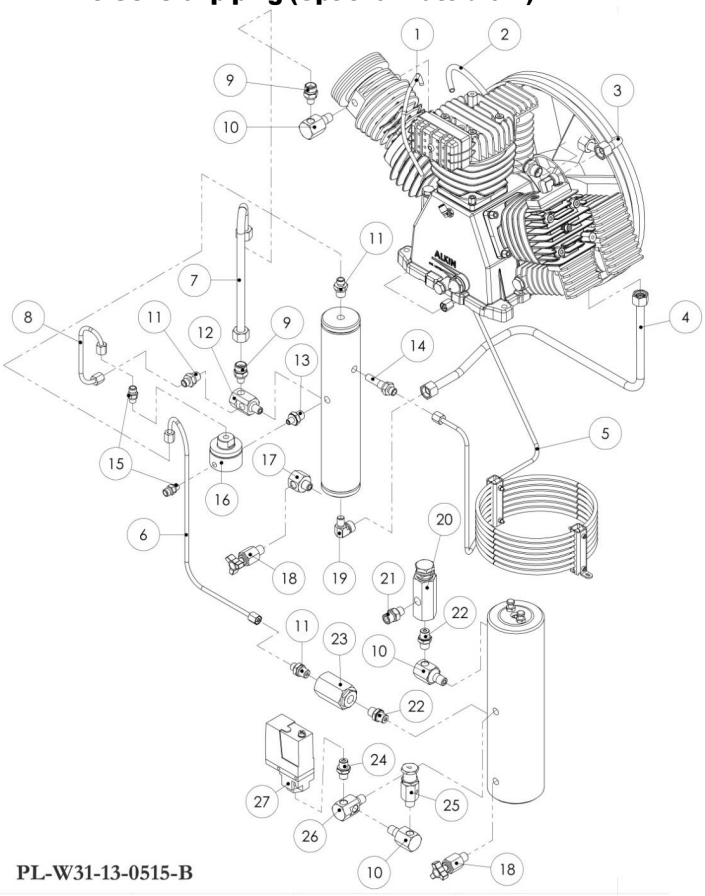

No	Part nr.	Description	Qty.
1	6908-17	Lubrication hose-3rd Stage	1
2	6908-16	Hose-Crankcase-suction	1
3	6908-05	Tube - 1st-2nd stg.	1
4	6908-06	Tube- 2nd stg. Water separator	1
5	6908-20	Aftercooler	1
6	2000-14	Water Seperator Outlet Tube	1
7	2000-12	3rd Stage Inlet Tube	1
8	2000-15	Intermediate Tube	1
9	7424-01	Nipple-1/4"xØ12	2
10	7084-02	Elbow(1/4-1/4)	3
11	7422-01	Nipple-1/4"xØ6	4
12	7084-10	Tee 1/4x1/4	1
13	7078-03	Nipple-1/4x1/8	1
14	7663-06	Water Seperator Nipple	1
15	7423-01	Nipple-1/8"xØ6	2
16	6436-01	Pneumatic Drain Valve-HP	1
17	7672-12	Elbow 1/4"x1:4"	1
18	7020-00	Drain Valve	2
19	7672-18	Elbow-3/8"xØ12 BSP	1
20	6460-01	Priority Valve	1
21	7890-01	Nipple 1/4" x 1/4"	1
22	7078-41	Nipple 1/4"NPT x 1/4" NPT	2
23	7140-01	Check Valve	1
24	7078-41	1/4" Nipple	1
25	7933-17	Safety Valve-110 Bar	1
26	7084-03	Elbow	1
27	80071-00	Pressure Switch	1

©ALKIN Kompresör Sanayi ve Ticaret Limited Şirketi

4.7 Aftercooler

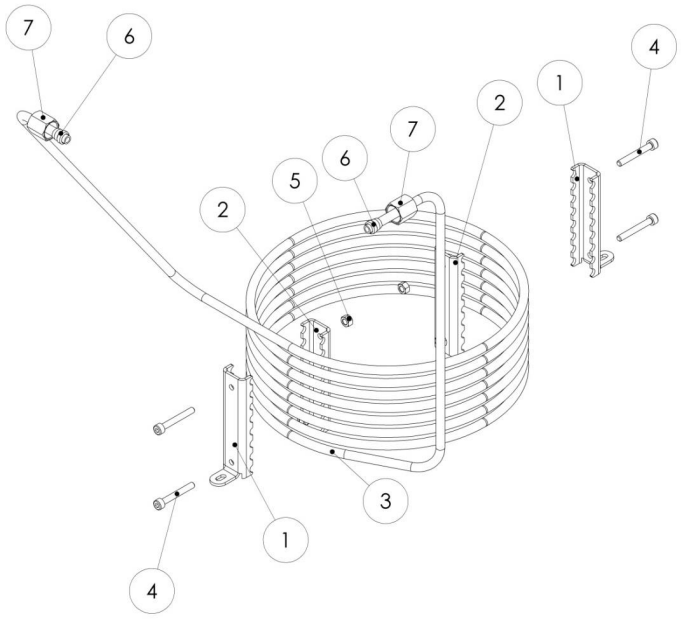

No	Parça no	Açıklama	Adet
1	7091-65	Clamp	2
2	7091-66	Clamp	2
3	6908-19	Aftercooler tube	1
4	7867-45	Bolt DIN 933	4
5	6884-25	Nut DIN 934	4
6	7422-04	Ø6 Ring	2
7	7422-03	Ø6 Nut	2

©ALKIN Kompresör Sanayi ve Ticaret Limited Şirketi

4.8 Condensate Separator&Purifier

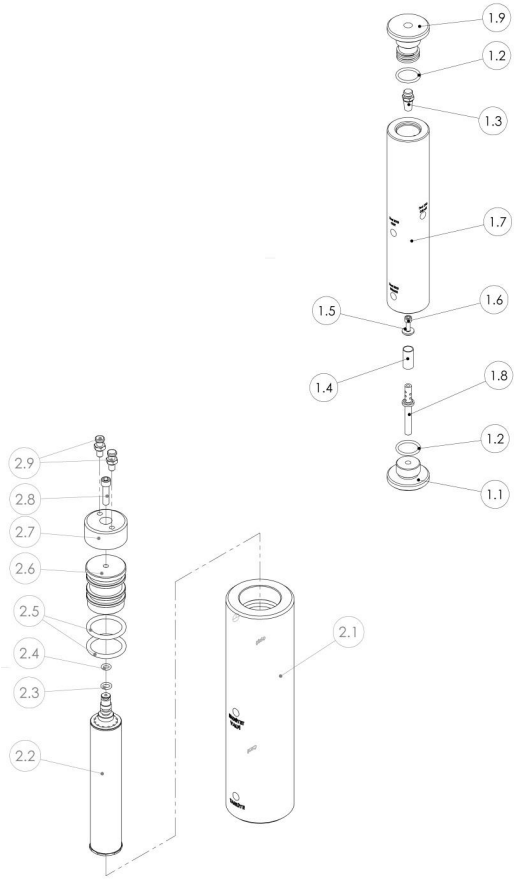

No	Part nr.	Description	Qty.
1	7663-10	Codensate separator complete	
1.1	7663-02	Cover	1
1.2	6893-06	O-ring	2
1.3	7983-01	Filter element	1
1.4	7765-06	Filter element	1
1.5	7765-08	Washer	1
1.6	6882-18	Screw	1
1.7	7663-08	Body	1
1.8	6916-05	Diffuser	1
1.9	7663-09	Top cover	1
2	7302-00	Purifier complete	
2.1	7302-08	Body	1
2.2	6702-02	Purifier cartridge	1
2.3	6702-10	O-ring	1
2.4	6702-11	O-ring	1
2.5	6893-07	O-ring	2
2.6	7302-02	Adapter	1
2.7	7303-03	Cover	1
2.8	7867-38	Bolt	2
2.9	7369-02	Removal apparatus	2

©ALKIN Kompresör Sanayi ve Ticaret Limited Şirketi

4.9 General connectors (electric motor)

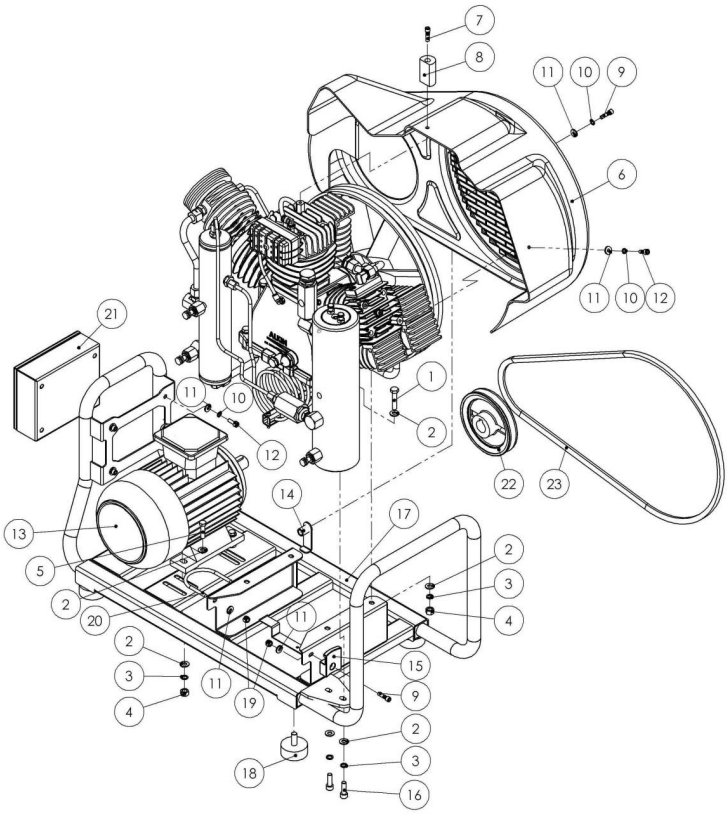

No	Part nr.	Description	Qty.
1	7867-98	Bolt-M8x40 AA	4
2	7091-31	Washer-M8	18
3	7091-32	Spring washer-M8	10
4	6884-19	Nut-M8	8
5	7867-61	Bolt-M8x30 AA	4
6	6914-48	Belt guard	1
7	7867-55	Bolt-M6x25	1
8	7038-04	Yoke holder	1
9	7867-09	Bolt-M6x20	2
10	7091-28	Spring washer-M6	6
11	7091-17	Washer-M6	9
12	6882-18	Bolt	5
13	-	Electric Motor	1
13.1	80081-06	2,2kw 3000d/d 220V	-
13.2	80081-10	2,2kw 3000d/d 380V	-
13.3	80057-02	3kw 3000d/d 380v	-
14	7823-03	M6 rivet nut	1
15	7877-01	Mount plate	1
16	7867-56	Bolt-M8x55	2
17	3004-06	Subbase	1
18	6953-01	Vibration mount	4
19	6884-21	Lock nut-M6	3
20	7813-02	Clamp	1
21		Electric panel	1
21.1	6914-50	Electric panel -Standart	
21.2	6914-70	Electric panel-Auto drain	
22	7974-05	Pulley	1
23	7953-31	V-Belt	1

©ALKIN Kompresör Sanayi ve Ticaret Limited Şirketi

4.10 General connectors (Petrol engine)

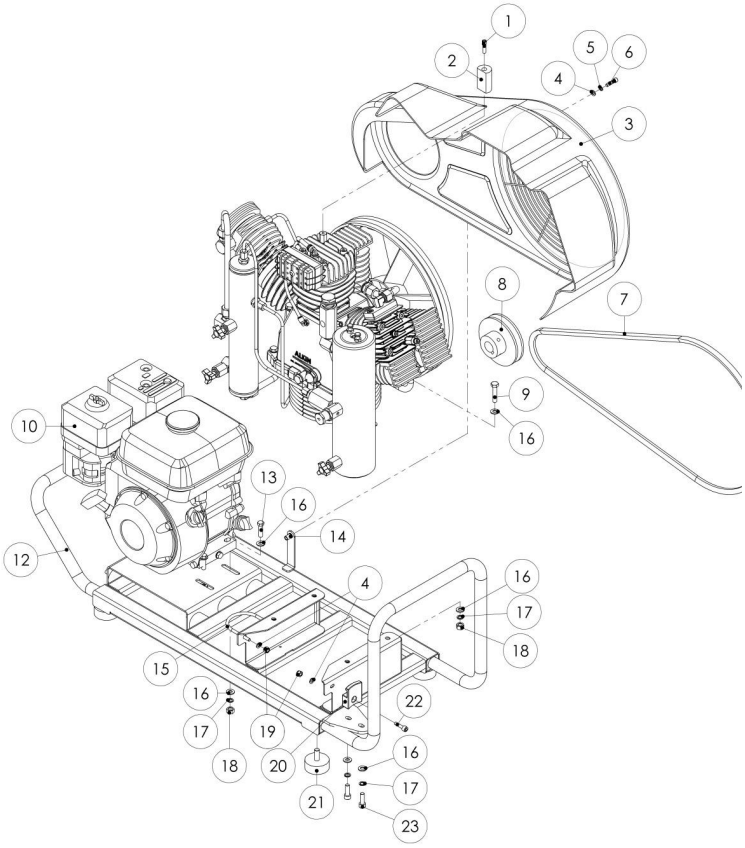

PL-W31-20-0515

No	Parça no	Açıklama	Adet
1	7867-55	Bolt	1
2	7038-04	Yoke Holder	1
3	6914-67	Flywheel Cover	1
4	7091-17	Washer-M6	5
5	7091-28	Spring Washer-M6	2
6	7867-09	Bolt M6x20	1
7	7953-45	V-Belt	1
8	7976-07	Pulley	1
9	7867-98	Bolt-M8x40	4
10	80058-00	Petrol Engine	1
11	3002-09	Crankcase Lower Plate	1
12	6914-60	Chasis	1
13	7867-61	Bolt	4
14	7823-03	Rivnut	1
15	7813-02	Clamp	1
16	7091-31	Washer-M8	18
17	7091-32	Spring Washer-M8	10
18	6884-19	Nut M8	8
19	6884-21	Fibered Nut-M6	3
20	7877-01	Clamp Support	1
21	6953-01	Shock Mount	4
22	7867-09	Socket Head Bolt M6x20	1
23	7867-56	Bolt-M8x55	2

©ALKIN Kompresör Sanayi ve Ticaret Limited Şirketi

4.11 Filling line (Standart)

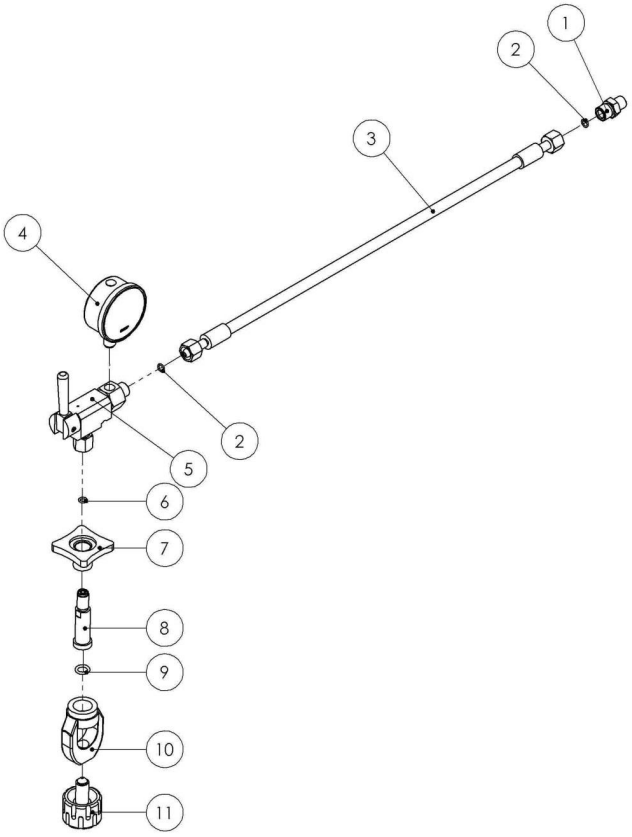

No	Part nr.	Description	Qty.
1	7890-01	Nipple-Hose	1
2	7670-13	O-ring- Hortum	2
3	7912-12	Filling hose	1
4	7235-22	Pressure gauge-400 Bar	1
5	7866-00	Filling valve	1
6	7829-04	O-ring	1
7	7880-03	Handle	1
8	7880-05	Filling adapter	1
9	7880-06	O-ring	1
10	7429-01	Yoke	1
11	7429-03	Yoke handle	1

©ALKIN Kompresör Sanayi ve Ticaret Limited Şirketi

4.12 Filling line(Optional-Dual output)

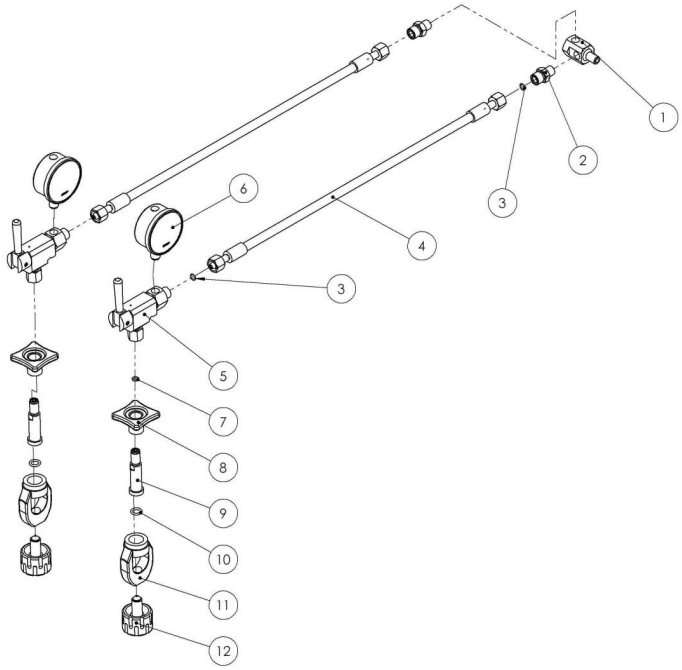

No	Part nr.	Description	Qty.
1	7084-03	Tee 1/4x1/4	1
2	7890-01	Nipple-Hose	2
3	7670-13	O-ring- Hose	4
4	7912-12	Fillig hose	2
5	7866-00	Filling valve	2
6	7235-22	Pressure gauge-400 Bar	2
7	7829-04	O-ring	2
8	7880-03	Handle	2
9	7880-05	Filling adapter	2
10	7880-06	O-ring	2
11	7429-01	Yoke	2
12	7429-03	Yoke Handle	2

©ALKIN Kompresör Sanayi ve Ticaret Limited Şirketi

4.13 Filling line (Optional-Dual pressure)

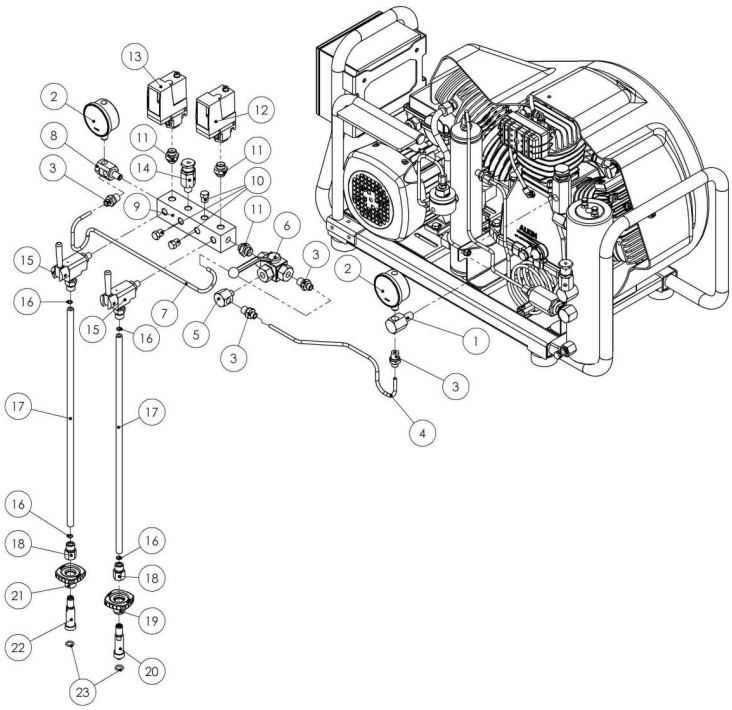

No	Part nr.	Description	Qty.
1	7084-01	Tee 1/4"	1
2	7235-22	Pressure gauge-400 Bar	2
3	7422-01	Nipple-1/4"xØ6	4
4	3004-69	Tube ass'y	1
5	7672-12	Elbow 1/4x1/4	1
6	7191-04	Routing valve-1/4" 500 bar	1
7	3004-70	Tube ass'y	1
8	7084-03	Tee 1/4x1/4	1
9	3003-86	Filling collector	1
10	7083-02	Plug	3
11	7078-41	Nipple-1/4NPTx1/4BSP	3
12	80071-01	Pressure switch	1
13	80071-00	Pressure switch	1
14	7386-25	Safety valve- 220 Bar	1
15	7866	Filling valve	2
16	7670-13	O-ring	4
17	7912-12	Filling hose	2
18	7891-04	Nipple-fillig höse	2
19	7880-19	DIN adapter-handle300 Bar	1
20	7880-15	DIN adapter-300 Bar	1
21	7880-03	Din adapter-handle 200 Bar	1
22	7880-04	DIN adapter-200 Bar	1
23	7880-06	O-ring	2

©ALKIN Kompresör Sanayi ve Ticaret Limited Şirketi

©ALKIN Kompresör Sanayi ve Ticaret Limited Şirketi

Section
5

5.0 Tecnical drawings

Teknical Drawings

©ALKIN Kompresör Sanayi ve Ticaret Limited Şirketi

66

©ALKIN Kompresör Sanayi ve Ticaret Limited Şirketi

W31 SERIES
HIGH PRESSURE BREATHING AIR COMPRESSOR

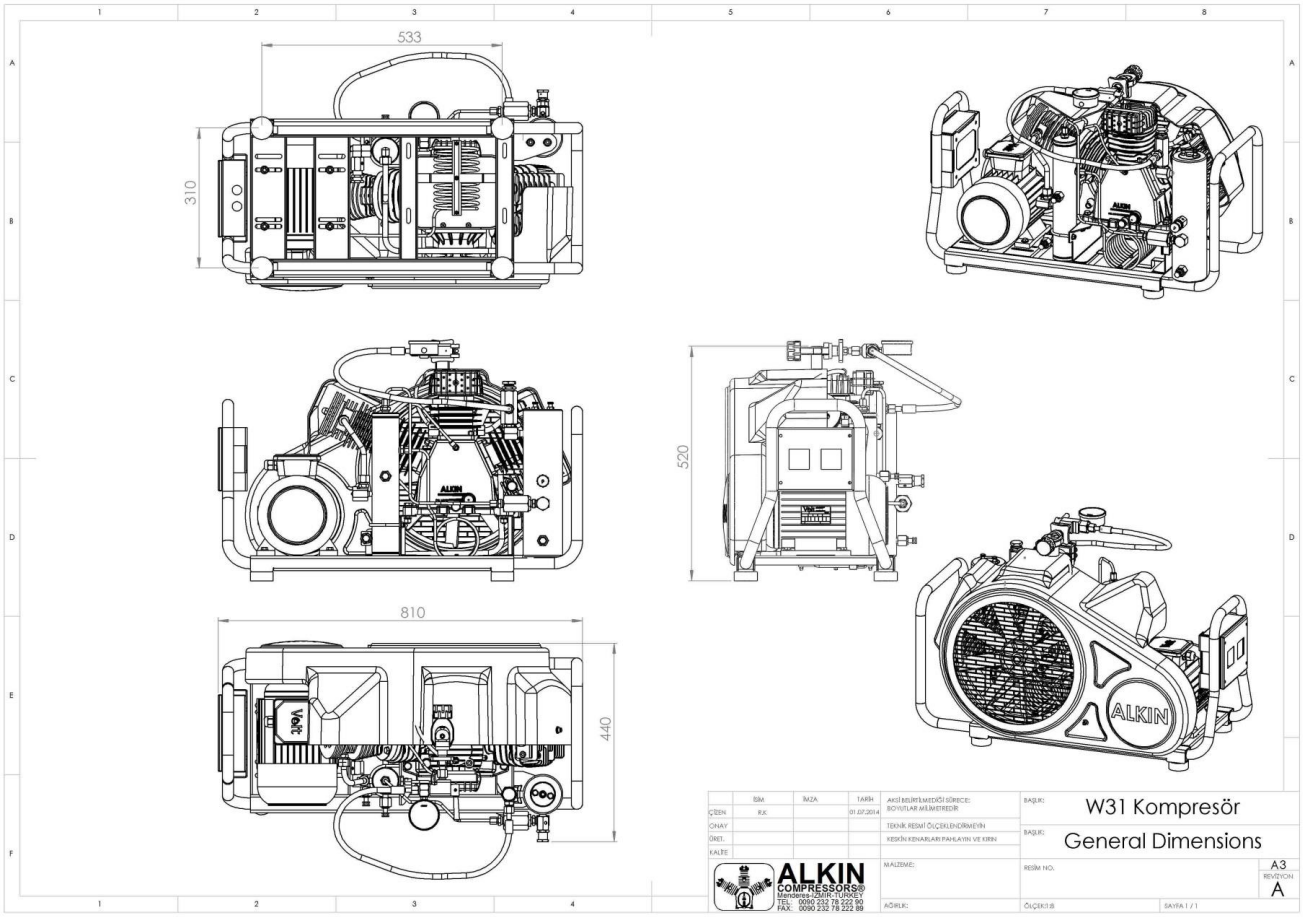

©ALKIN Kompresör Sanayi ve Ticaret Limited Şirketi

W31 SERIES
HIGH PRESSURE BREATHING AIR COMPRESSOR

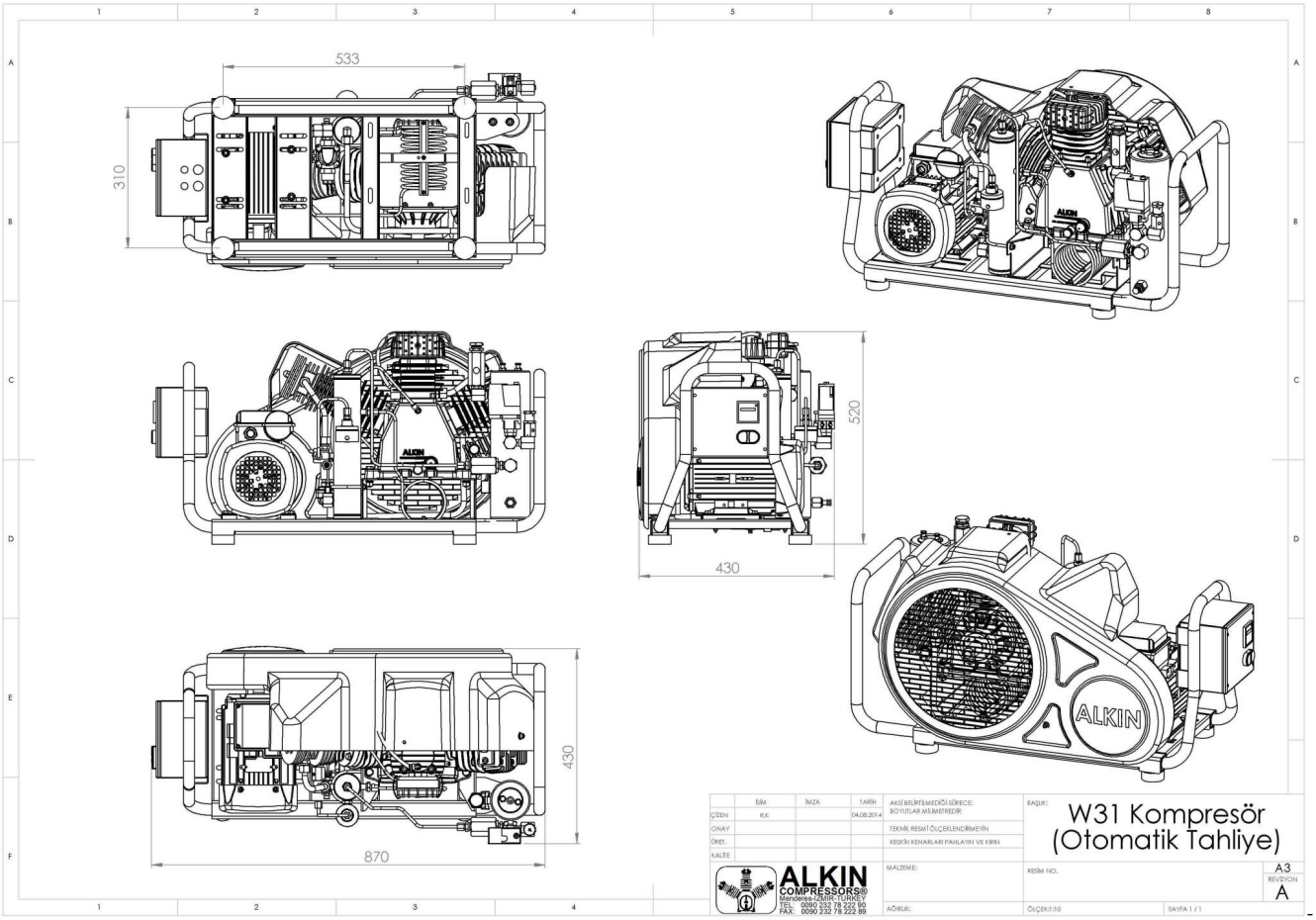

©ALKIN Kompresör Sanayi ve Ticaret Limited Şirketi

W31 SERIES
HIGH PRESSURE BREATHING AIR COMPRESSOR

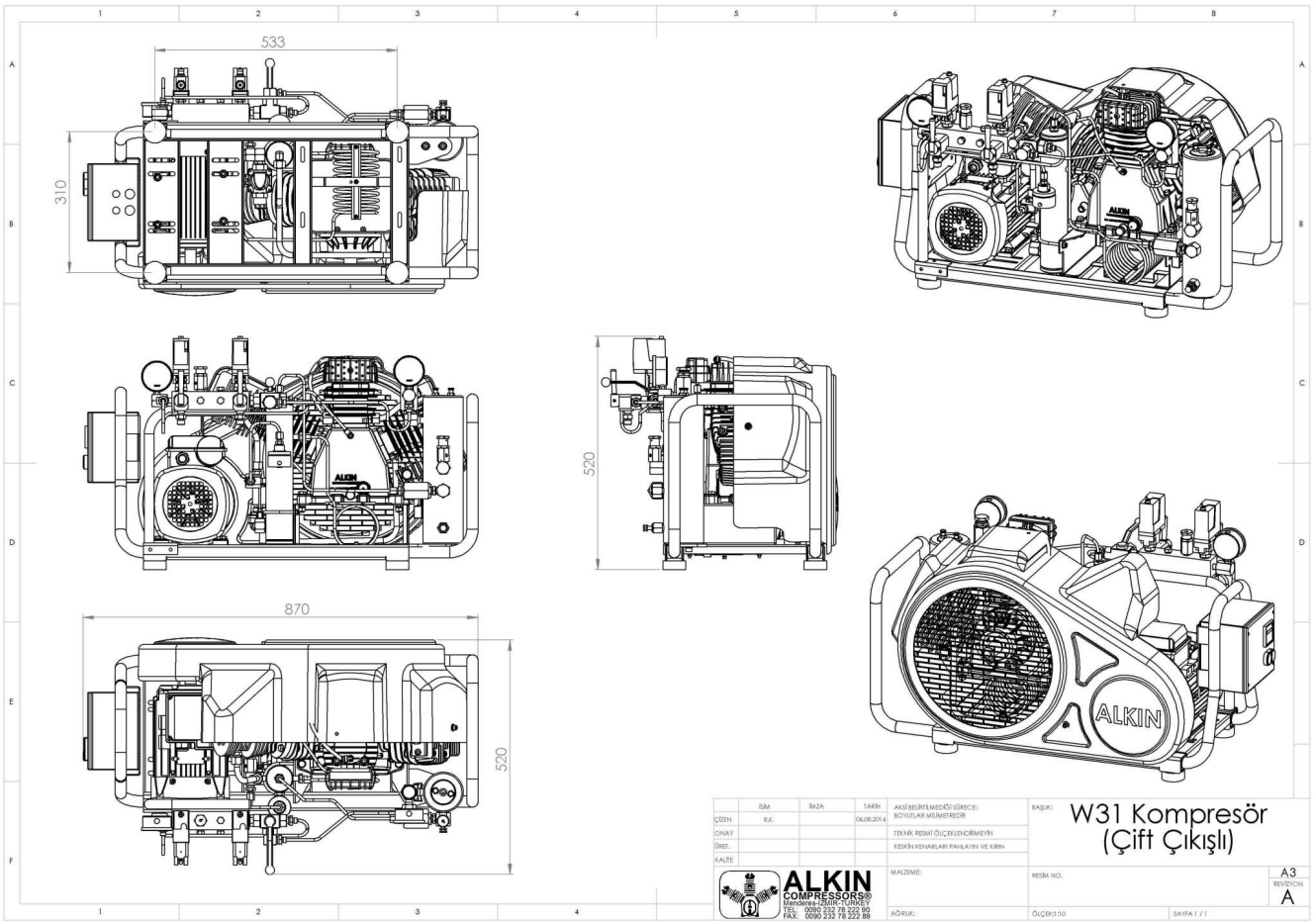

©ALKIN Kompresör Sanayi ve Ticaret Limited Şirketi

W31 SERIES
HIGH PRESSURE BREATHING AIR COMPRESSOR

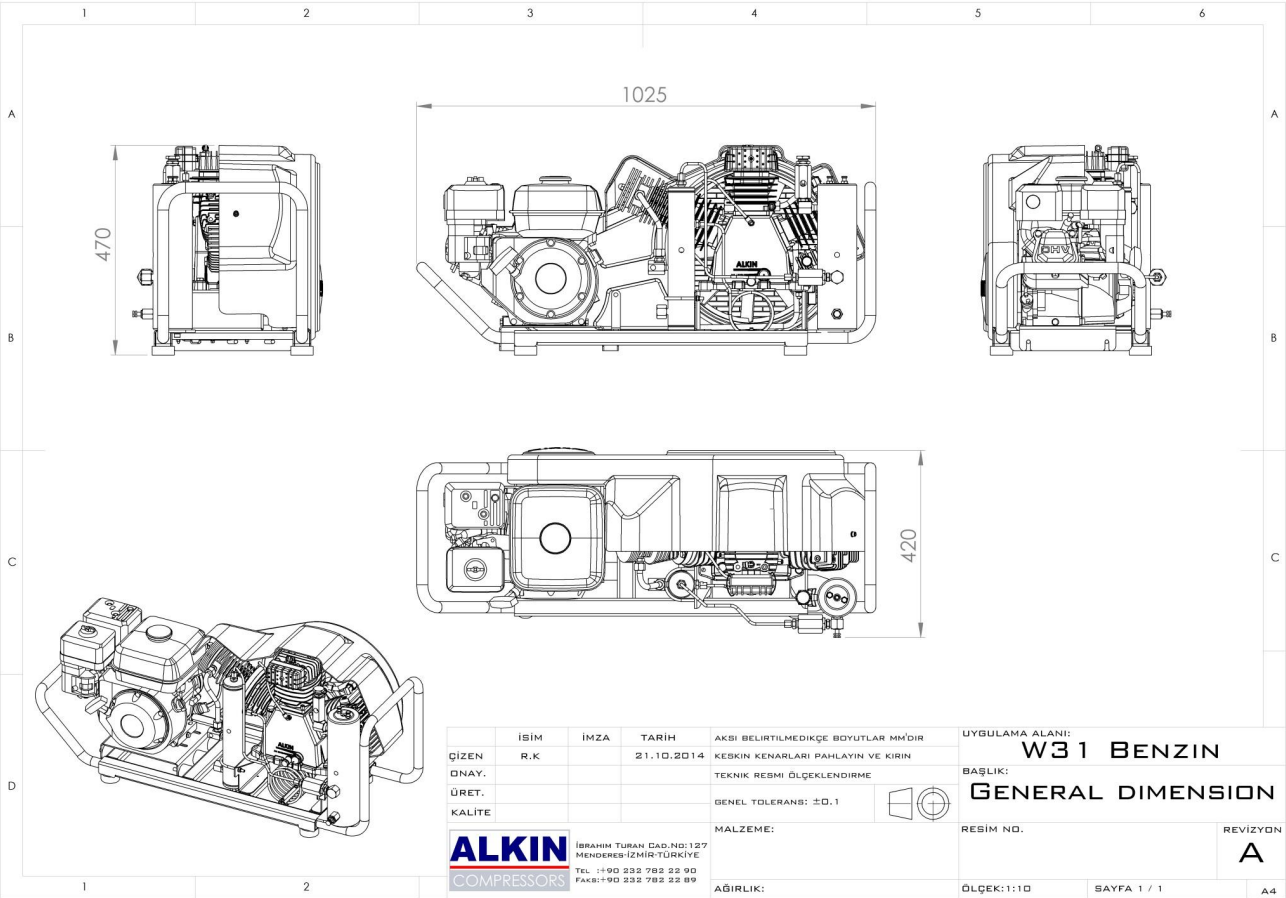

©ALKIN Kompresör Sanayi ve Ticaret Limited Şirketi

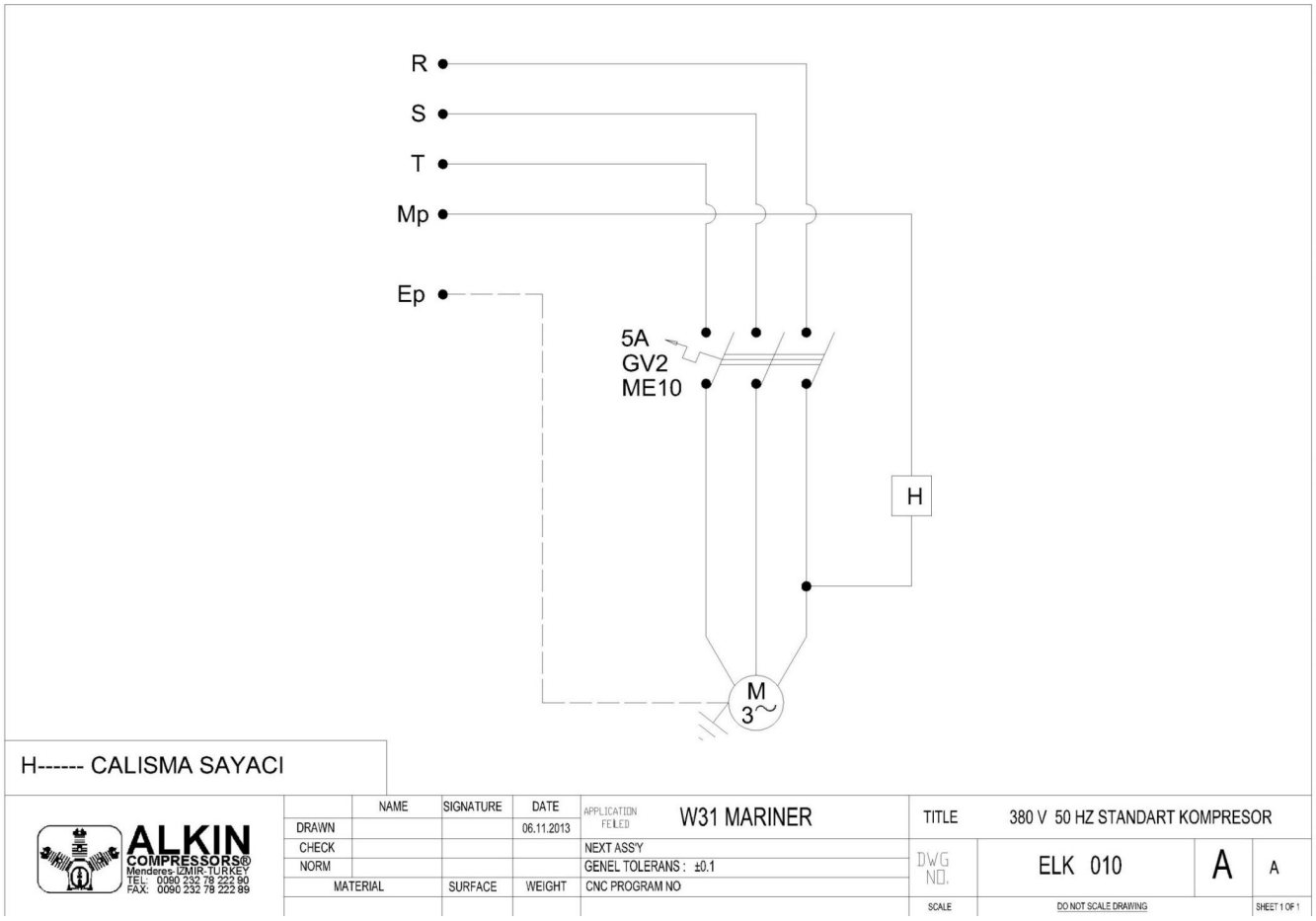

©ALKIN Kompresör Sanayi ve Ticaret Limited Şirketi

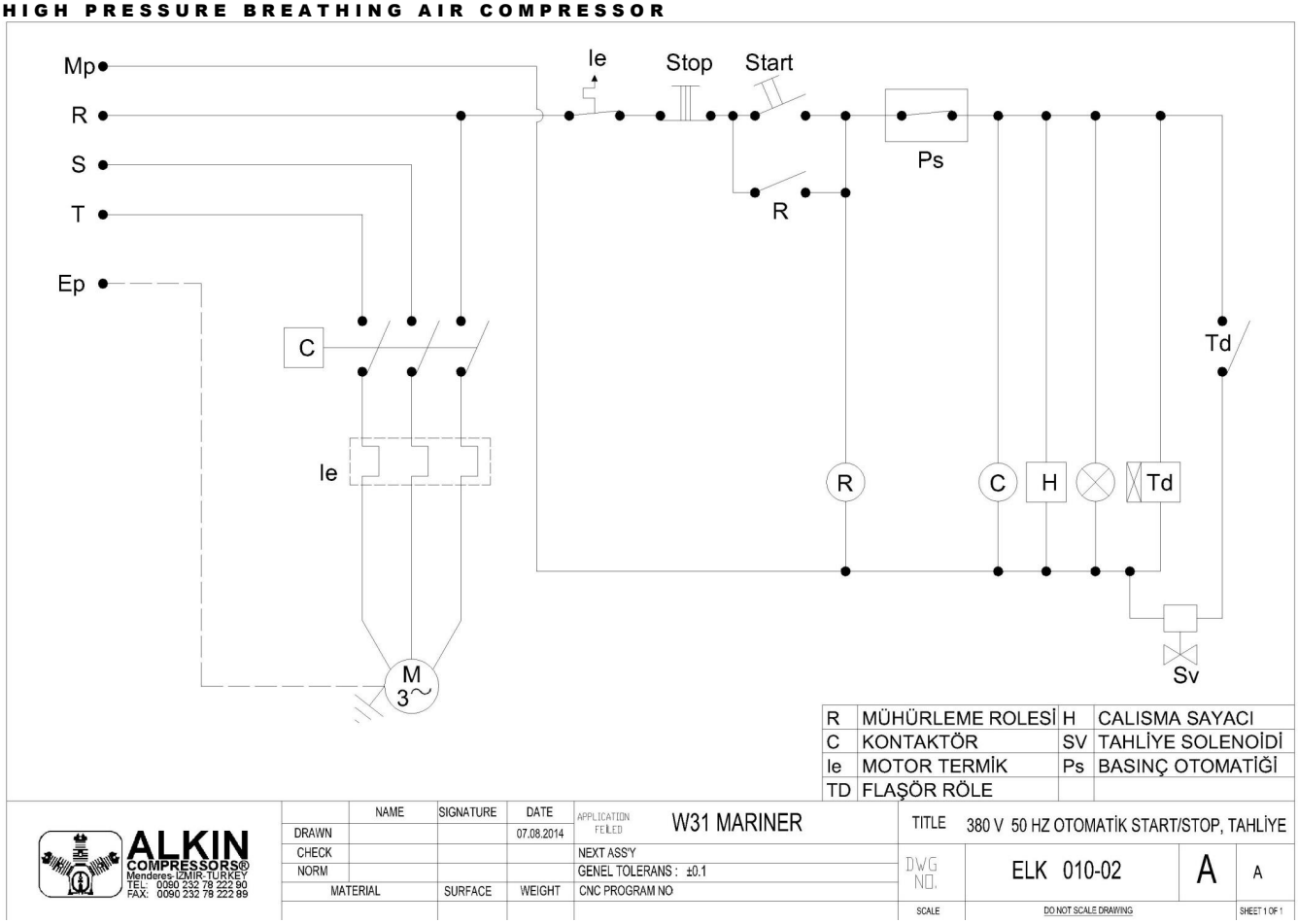

R	MÜHÜRLEME ROLESİ	H	CALISMA SAYACI
C	KONTAKTÖR	SV	TAHLİYE SOLENOİDİ
Ie	MOTOR TERMİK	Ps	BASINÇ OTOMATİĞİ
TD	FLAŞÖR RÖLE		

ALKIN COMPRESSORS®
Menderes-IZMIR-TURKEY
TEL: 0090 232 78 222 90
FAX: 0090 232 78 222 89

	NAME	SIGNATURE	DATE
DRAWN			07.08.2014
CHECK			
NORM			
MATERIAL		SURFACE	WEIGHT

APPLICATION FEILED: W31 MARINER

NEXT ASS'Y

GENEL TOLERANS : ±0.1

CNC PROGRAM NO

TITLE: 380 V 50 HZ OTOMATİK START/STOP, TAHLİYE

DWG NO.: ELK 010-02 | A | A

SCALE: DO NOT SCALE DRAWING | SHEET 1 OF 1

©ALKIN Kompresör Sanayi ve Ticaret Limited Şirketi

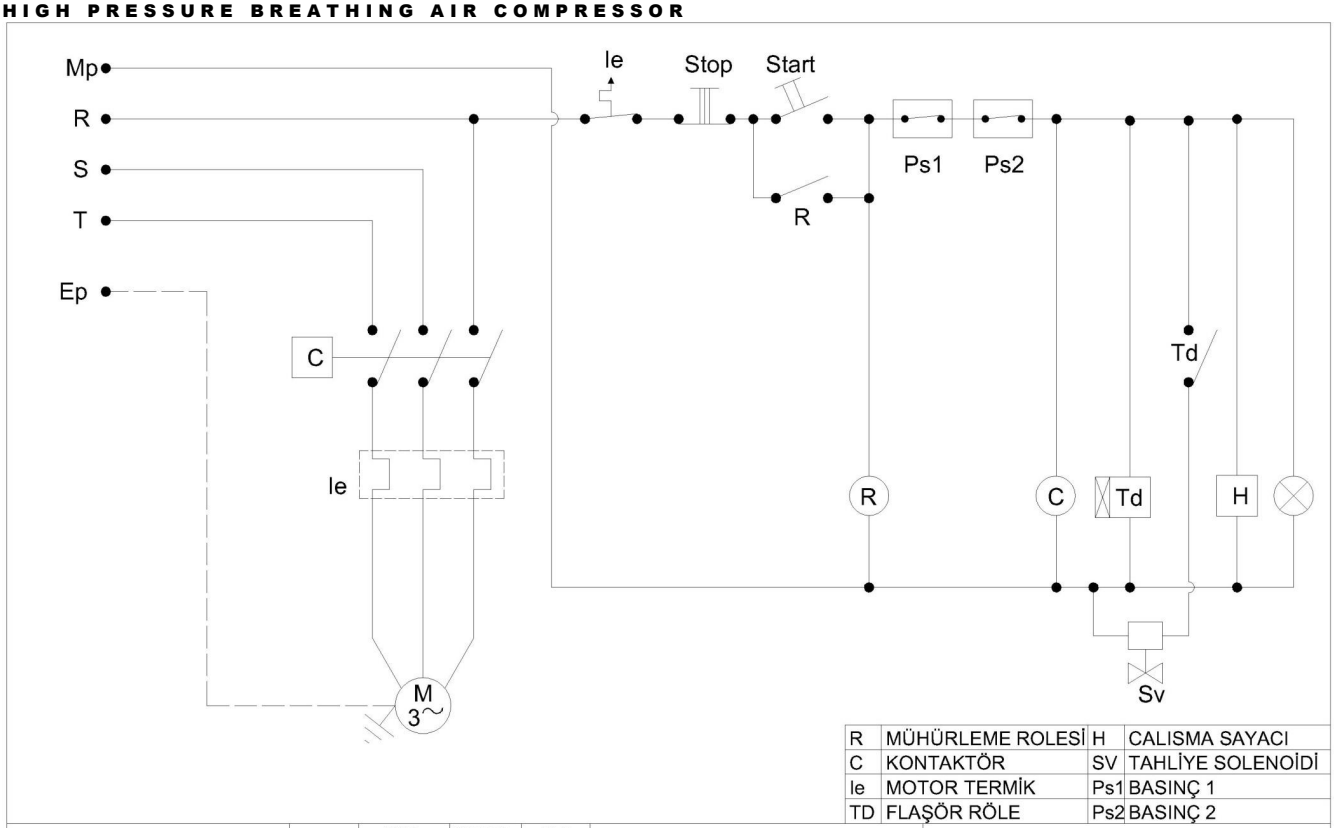

R	MÜHÜRLEME ROLESİ	H	CALISMA SAYACI
C	KONTAKTÖR	SV	TAHLİYE SOLENOİDİ
Ie	MOTOR TERMİK	Ps1	BASINÇ 1
TD	FLAŞÖR RÖLE	Ps2	BASINÇ 2

ALKIN COMPRESSORS®
Menderes-İZMİR-TURKEY
TEL: 0090 232 78 222 90
FAX: 0090 232 78 222 89

	NAME	SIGNATURE	DATE	APPLICATION FELED	W31 MARINER	TITLE	380 V 50 HZ ÇİFT BASINÇ	
DRAWN			06.11.2013					
CHECK				NEXT ASS'Y		DWG NO.	ELK 010-03	A	A
NORM				GENEL TOLERANS : ±0.1				
MATERIAL		SURFACE	WEIGHT	CNC PROGRAM NO				
						SCALE	DO NOT SCALE DRAWING	SHEET 1 OF 1

©ALKIN Kompresör Sanayi ve Ticaret Limited Şirketi

©ALKIN Kompresör Sanayi ve Ticaret Limited Şirketi

© ALKIN KOMPRESÖR SAN. Ve Tic. Ltd. Şti
İbrahim Turan Caddesi No 127
Menderes,İzmir
Tel: +90 232 782 2290 • Fax: +90 232 782 22 89
www.alkin.com.tr
2014

©ALKIN Kompresör Sanayi ve Ticaret Limited Şirketi